335bl610-3 Assembly Drawings

5 Row - Aluminum Bleachers - Non-Elevated - Chain-link Guardrail System - 15 Feet - Aisle Spectator Left - Weight: 1090lbs - Seats 42

Park Warehouse, LLC

7495 W. Atlantic Ave. Suite 200-294, Delray Beach, FL 33446

CS.1	– COVER SHEET
TD.1	– BLEACHER SEATING PLAN
FP.1	– FOUNDATION PLAN
BA.1	– BLEACHER FRAMING & CLIP PRE–ASSEMBLY
BA.2	– BLEACHER BRACING LOCATION PLAN
BA.3	– BLEACHER ASSEMBLY
AP.1	– ANCHORING PLAN
PF.1	– PLANK & FRAMING PLAN
VA.1	– VERTICAL AISLE ASSEMBLY
GR.1	– GUARDRAIL ASSEMBLY

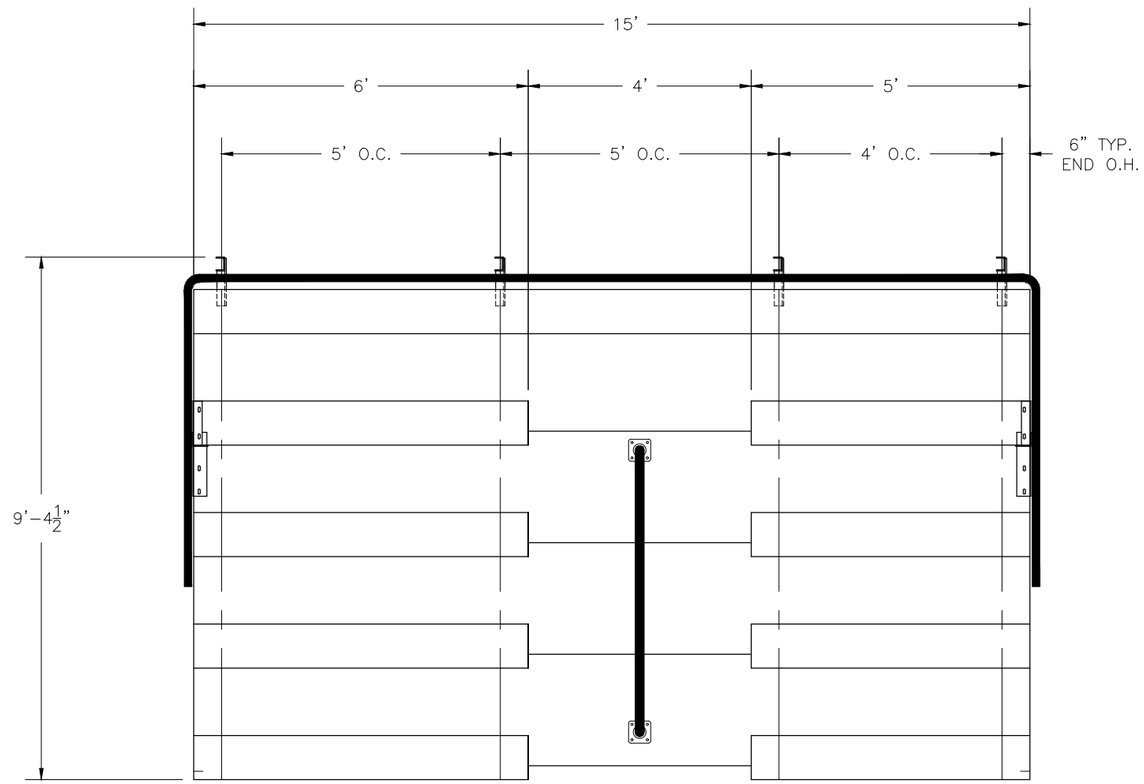

SECTION LENGTH	GROSS SEATS	ACTUAL SEATS	NO. OF ROWS	NET SEATS
15	10.00	10.00	1	10
6	4.00	4.00	4	16
5	3.33	3.00	4	12
			NET SEATS	**38**
			WHEELCHAIR SPACES	**0**
			TOTAL NET SEATING CAPACITY (BASED ON 18" PER SEAT)	**38**

This drawing and all information contained herein is the property of PARK WAREHOUSE, LLC. and is not to be reproduced without express written permission of this manufacturer. We assume no responsibility for unauthorized use of this drawing. PARK WAREHOUSE, LLC. is not responsible for local permits and occupancy requirements.

Park Warehouse, LLC
7495 W. Atlantic Ave. Suite 200-294, Delray Beach, FL 33446

SCALE: N.T.S.
DATE: 12/27/16
APPROVED BY:
DRAWN BY: IMP
TITLE: 5 ROW X 15'-0" BLEACHER SEATING PLAN
BLEACHER MODEL #: 335bl610-3-DLX-CLC
DRAWING NUMBER: TD.1

LOCATE FRAMES ON FOUNDATION

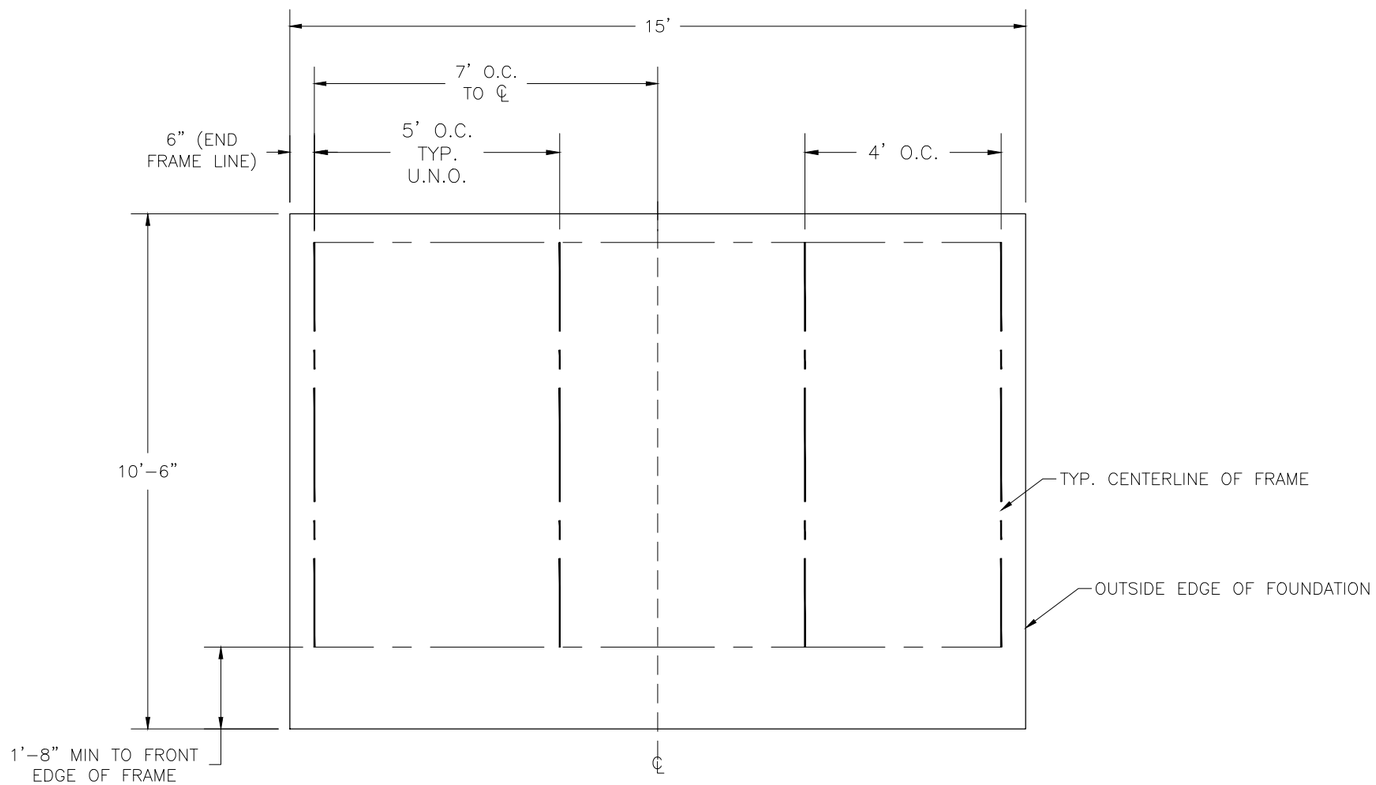

* MINIMUM FOUNDATION AREA SHOWN. DEPENDING ON LOCAL SOIL CONDITIONS, BLEACHER CAN BE INSTALLED ON A CONCRETE PAD OR FOOTERS, OR ATTACHED TO 2x6 TREATED LUMBER GROUND SILLS AND PLACED ON COMPACTED STONE, ASPHALT, OR ANY OTHER SMOOTH, SOLID, LEVEL SURFACE. CONSULT YOUR LOCAL CONCRETE CONTRACTOR TO DETERMINE PROPER CONCRETE SPECIFICATIONS FOR YOUR LOCAL SOIL AND WEATHER-RELATED CONDITIONS. THE BEARING SURFACE MUST BE CAPABLE OF SUPPORTING A MINIMUM OF 660 POUNDS PER LINEAR FOOT. TO MEET LOCAL CODES, BLEACHERS WILL NEED TO BE ANCHORED. ANCHORING SYSTEMS FOR ALL SURFACE TYPES ARE AVAILABLE - CONTACT YOUR BLEACHER SALES REPRESENTATIVE FOR MORE INFORMATION.

This drawing and all information contained herein is the property of PARK WAREHOUSE, LLC. and is not to be reproduced without express written permission of this manufacturer. We assume no responsibility for unauthorized use of this drawing. PARK WAREHOUSE, LLC. is not responsible for local permits and occupancy requirements.

Park Warehouse, LLC
7495 W. Atlantic Ave. Suite 200-294, Delray Beach, FL 33446

SCALE: N.T.S.	APPROVED BY:	DRAWN BY: IMP
DATE: 12/27/16		
TITLE: 5 ROW 15'-0" FOUNDATION PLAN		
BLEACHER MODEL #: 335bl610-3-DLX-CLC		DRAWING NUMBER: FP.1

(OPTIONAL) ATTACH GROUND SILLS *

*NOT ALL BLEACHERS WILL RECEIVE GROUND SILLS. IF YOUR UNIT DOES NOT INCLUDE THIS FEATURE, SKIP THIS STEP.

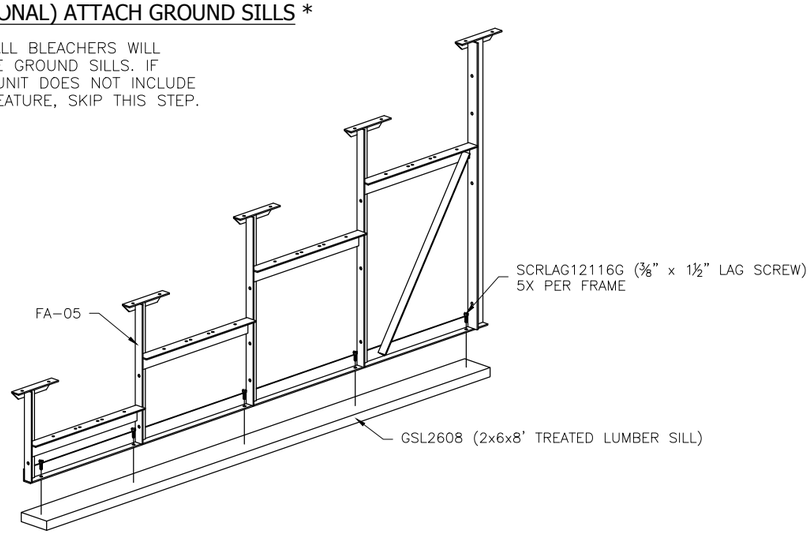

PRE-ASSEMBLE X-BRACE PAIR(S)

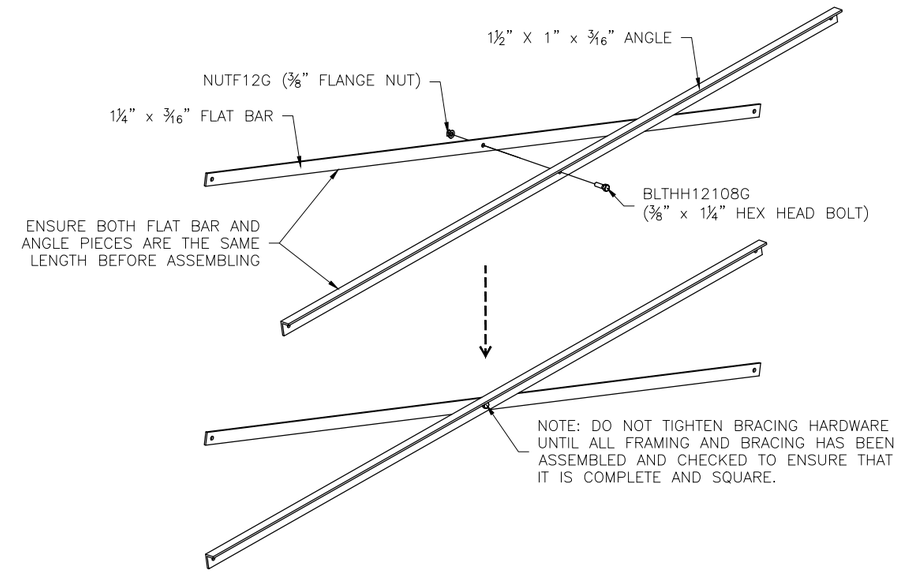

ONCE FRAMING IS COMPLETE, PRE-ASSEMBLE CLIP SETS ON BLEACHER FRAMES

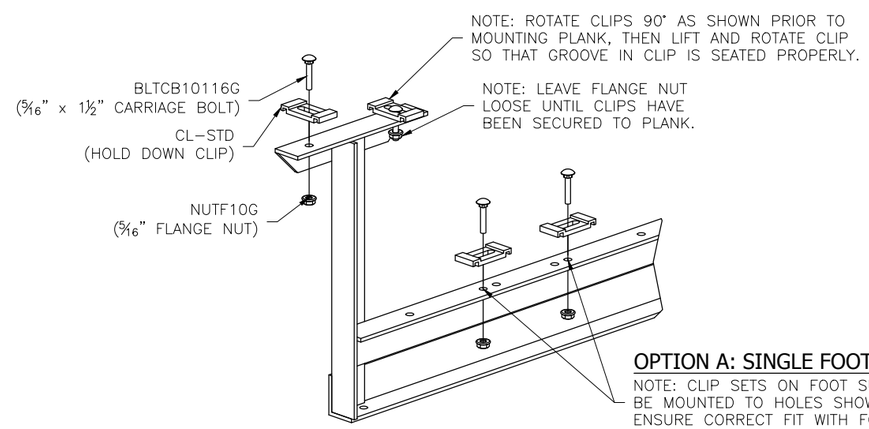

OPTION A: SINGLE FOOT BOARDS

NOTE: CLIP SETS ON FOOT SUPPORTS MUST BE MOUNTED TO HOLES SHOWN HERE TO ENSURE CORRECT FIT WITH FOOT PLANK.

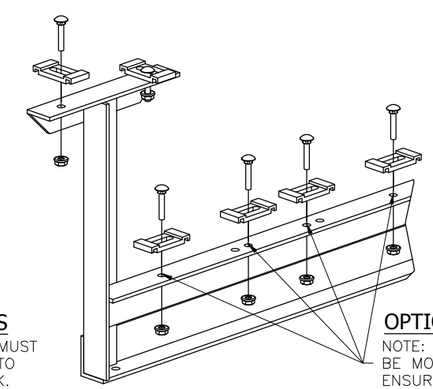

OPTION B: DOUBLE FOOT BOARDS

NOTE: CLIP SETS ON FOOT SUPPORTS MUST BE MOUNTED TO HOLES SHOWN HERE TO ENSURE CORRECT FIT WITH FOOT PLANK.

This drawing and all information contained herein is the property of PARK WAREHOUSE, LLC. and is not to be reproduced without express written permission of this manufacturer. We assume no responsibility for unauthorized use of this drawing. PARK WAREHOUSE, LLC. is not responsible for local permits and occupancy requirements.

Park Warehouse, LLC
7495 W. Atlantic Ave. Suite 200-294, Delray Beach, FL 33446

SCALE: N.T.S.	APPROVED BY:	DRAWN BY: IMP
DATE: 12/27/16		
TITLE: 5 ROW X 15'-0" FRAMING & CLIP SET PREPARATION		
BLEACHER MODEL #: 335bl610-3-DLX-CLC		DRAWING NUMBER: BA.1

1 TYP X-BRACE CONN. W/ 1¼ BOLT

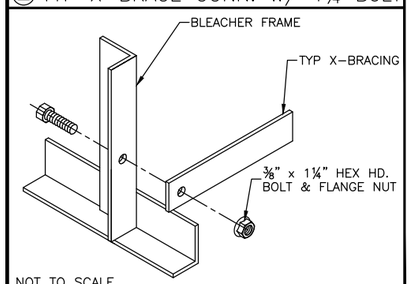

NOT TO SCALE

TYP. X-BRACE LOCATION DETAIL
INSTALL AT CLOSED BAYS ONLY
SEE SHEET # PF.1 FOR BAY CONFIGURATION

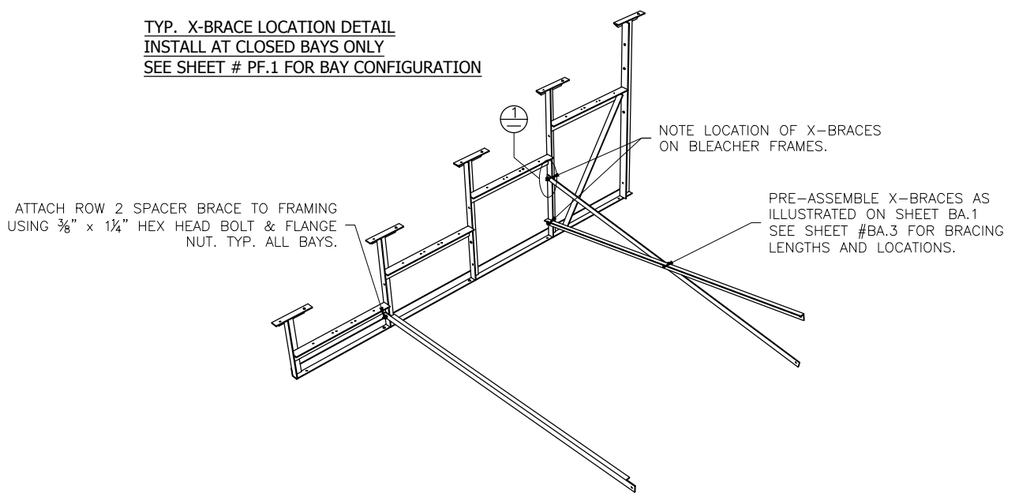

TYP. SPACER BRACE LOCATION DETAIL
INSTALL AT OPEN BAYS ONLY
SEE SHEET # PF.1 FOR BAY CONFIGURATION

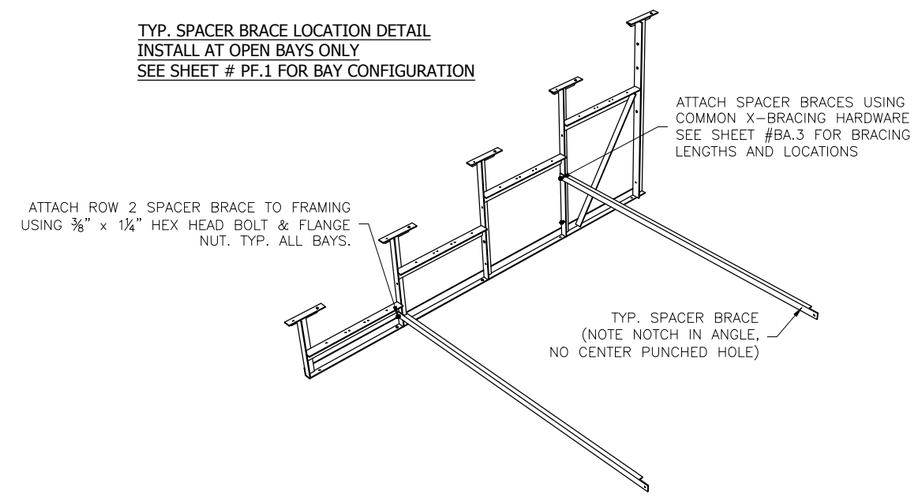

This drawing and all information contained herein is the property of PARK WAREHOUSE, LLC. and is not to be reproduced without express written permission of this manufacturer. We assume no responsibility for unauthorized use of this drawing. PARK WAREHOUSE, LLC. is not responsible for local permits and occupancy requirements.

Park Warehouse, LLC
7495 W. Atlantic Ave. Suite 200-294, Delray Beach, FL 33446

SCALE: N.T.S.	APPROVED BY:	DRAWN BY: IMP
DATE: 12/27/16		
TITLE: 5 ROW X 15'-0" BLEACHER BRACING LOCATION		
BLEACHER MODEL #: 335bl610-3-DLX-CLC		DRAWING NUMBER: BA.2

1 TYP X-BRACE CONN. W/ 1¼ BOLT

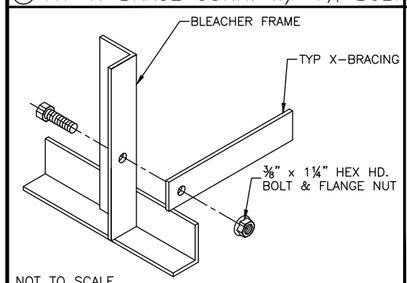

NOT TO SCALE

2 TYP 2x10 PLANK ATTACHMENT

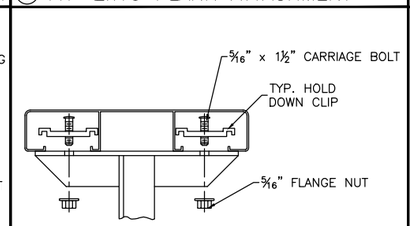

NOT TO SCALE

3 TYP 1x6 PLANK ATTACHMENT

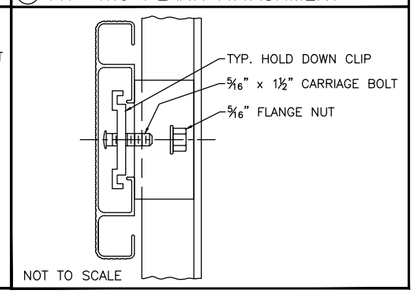

NOT TO SCALE

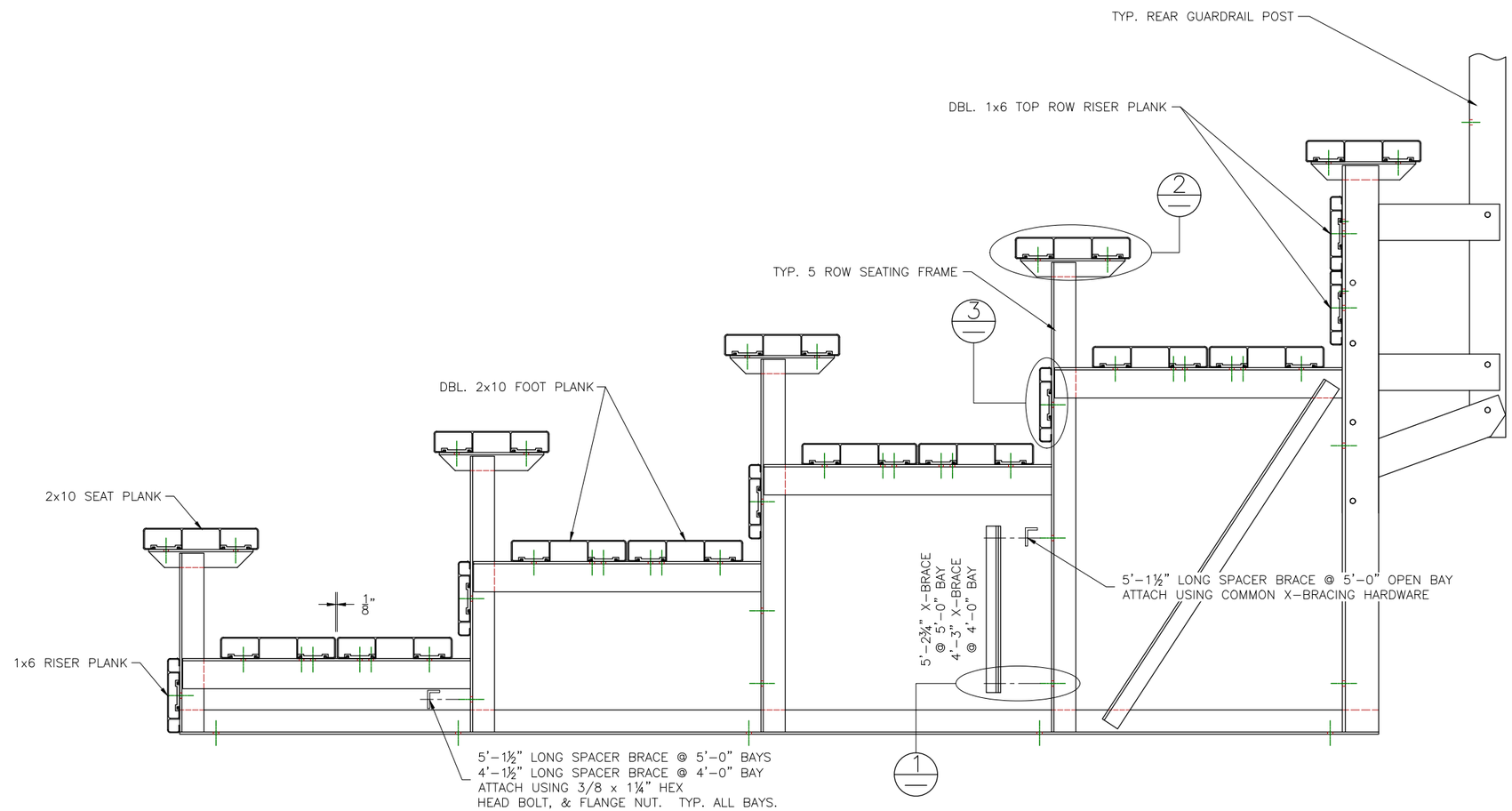

This drawing and all information contained herein is the property of PARK WAREHOUSE, LLC. and is not to be reproduced without express written permission of this manufacturer. We assume no responsibility for unauthorized use of this drawing. PARK WAREHOUSE, LLC. is not responsible for local permits and occupancy requirements.

Park Warehouse, LLC
7495 W. Atlantic Ave. Suite 200-294, Delray Beach, FL 33446

SCALE: N.T.S.	APPROVED BY:	DRAWN BY: IMP
DATE: 12/27/16		
TITLE: 5 ROW X 15'-0" BLEACHER ASSEMBLY		
BLEACHER MODEL #: 335bl610-3-DLX-CLC		DRAWING NUMBER: BA.3

1 WEDGE ANCHOR DETAIL – 3"

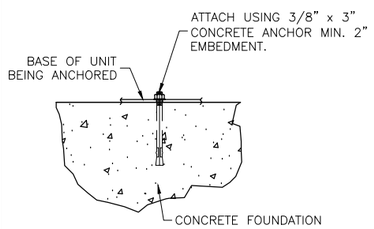

(OPTIONAL) ANCHOR BLEACHER TO CONCRETE FOUNDATION *

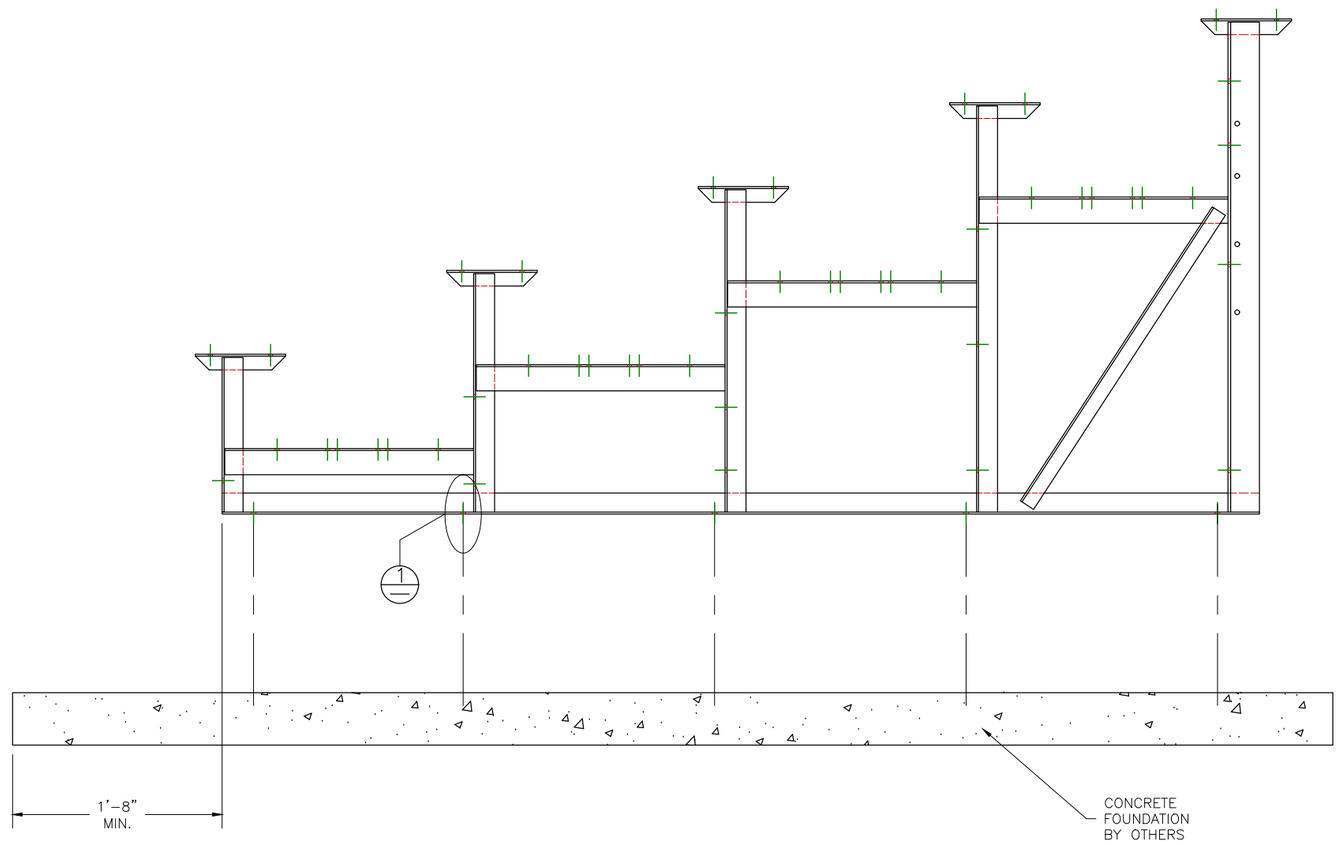

* CONCRETE WEDGE ANCHORS NOT INCLUDED WITH ALL UNITS. IF USING OTHER ANCHORING SYSTEM, SKIP THIS STEP AND REFER TO INSTRUCTIONS SPECIFIC TO THE ANCHORING SYSTEM PURCHASED FOR YOUR UNIT. SEE PRINT FP.1 (INCLUDED IN THIS PACKET) FOR GENERAL CONCRETE FOUNDATION SPECIFICATIONS.

This drawing and all information contained herein is the property of PARK WAREHOUSE, LLC. and is not to be reproduced without express written permission of this manufacturer. We assume no responsibility for unauthorized use of this drawing. PARK WAREHOUSE, LLC. is not responsible for local permits and occupancy requirements.

Park Warehouse, LLC
7495 W. Atlantic Ave. Suite 200-294, Delray Beach, FL 33446

SCALE: N.T.S.	APPROVED BY:	DRAWN BY: IMP
DATE: 12/27/16		
TITLE: 5 ROW X 15'–0" ANCHORING PLAN		
BLEACHER MODEL #: 335bl610-3-DLX-CLC		DRAWING NUMBER: AP.1

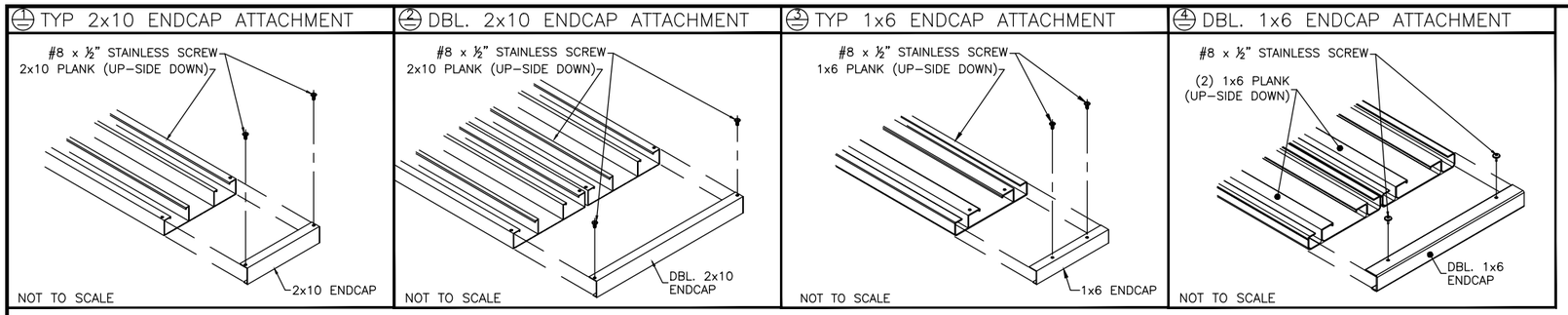

PLANK PLAN

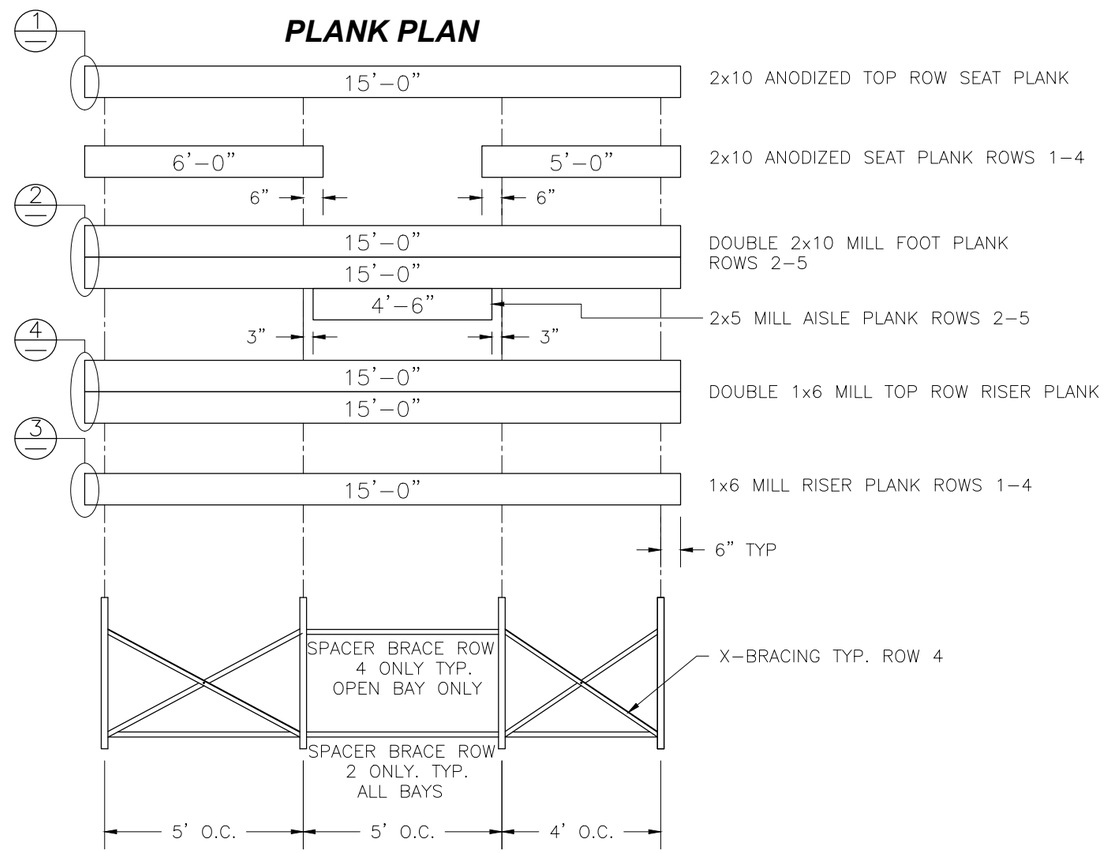

FRAMING PLAN

This drawing and all information contained herein is the property of PARK WAREHOUSE, LLC. and is not to be reproduced without express written permission of this manufacturer. We assume no responsibility for unauthorized use of this drawing. PARK WAREHOUSE, LLC. is not responsible for local permits and occupancy requirements.

Park Warehouse, LLC
7495 W. Atlantic Ave. Suite 200-294, Delray Beach, FL 33446

SCALE: N.T.S.	APPROVED BY:	DRAWN BY: IMP
DATE: 12/27/16		
TITLE: 5 ROW 15'-0" PLANK & FRAMING PLAN		
BLEACHER MODEL #: 335bl610-3-DLX-CLC		DRAWING NUMBER: PF.1

1 AISLE PLAN TYP. ALL ROWS

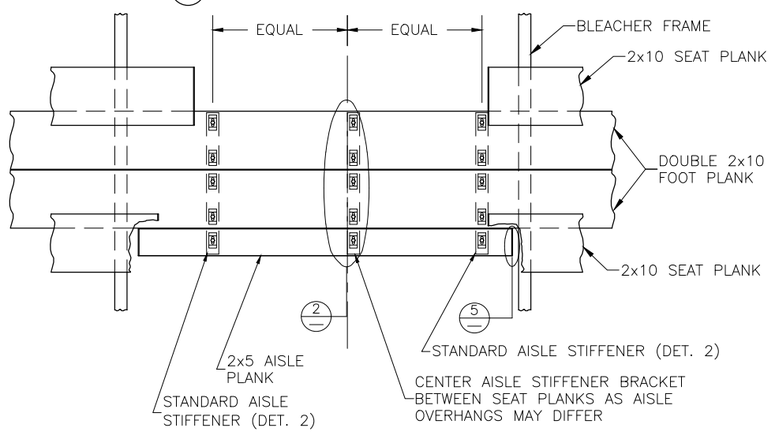

2 TYP. AISLE BKT DETAIL

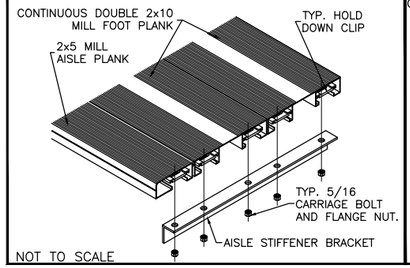

NOT TO SCALE

3 FRONT AISLE H.R. BRACKET DETAIL

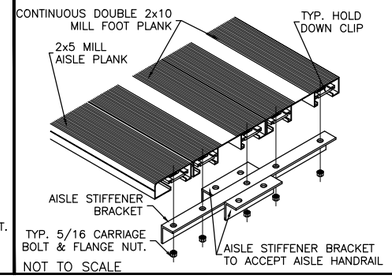

NOT TO SCALE

4 REAR AISLE H.R. BRACKET DETAIL

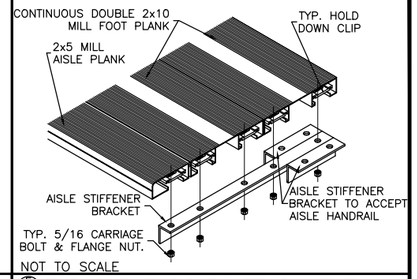

NOT TO SCALE

5 TYP 2x5 ENDCAP ATTACHMENT

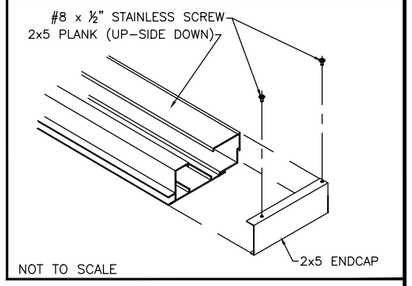

NOT TO SCALE

DETAIL A

FRONT HANDRAIL ASSEMBLY SHOWN
LOCATE OVER REAR FOOT PLANK FOR REAR ASSEMBLY

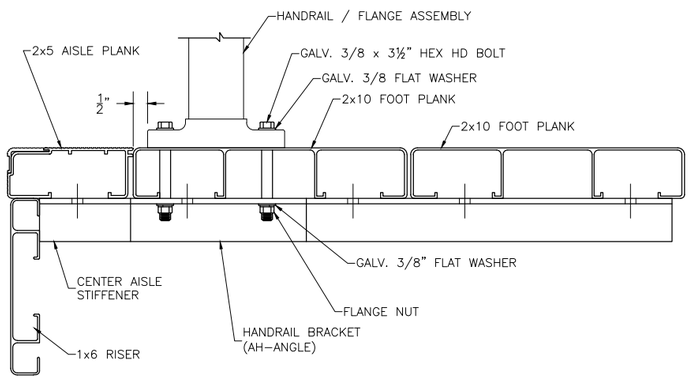

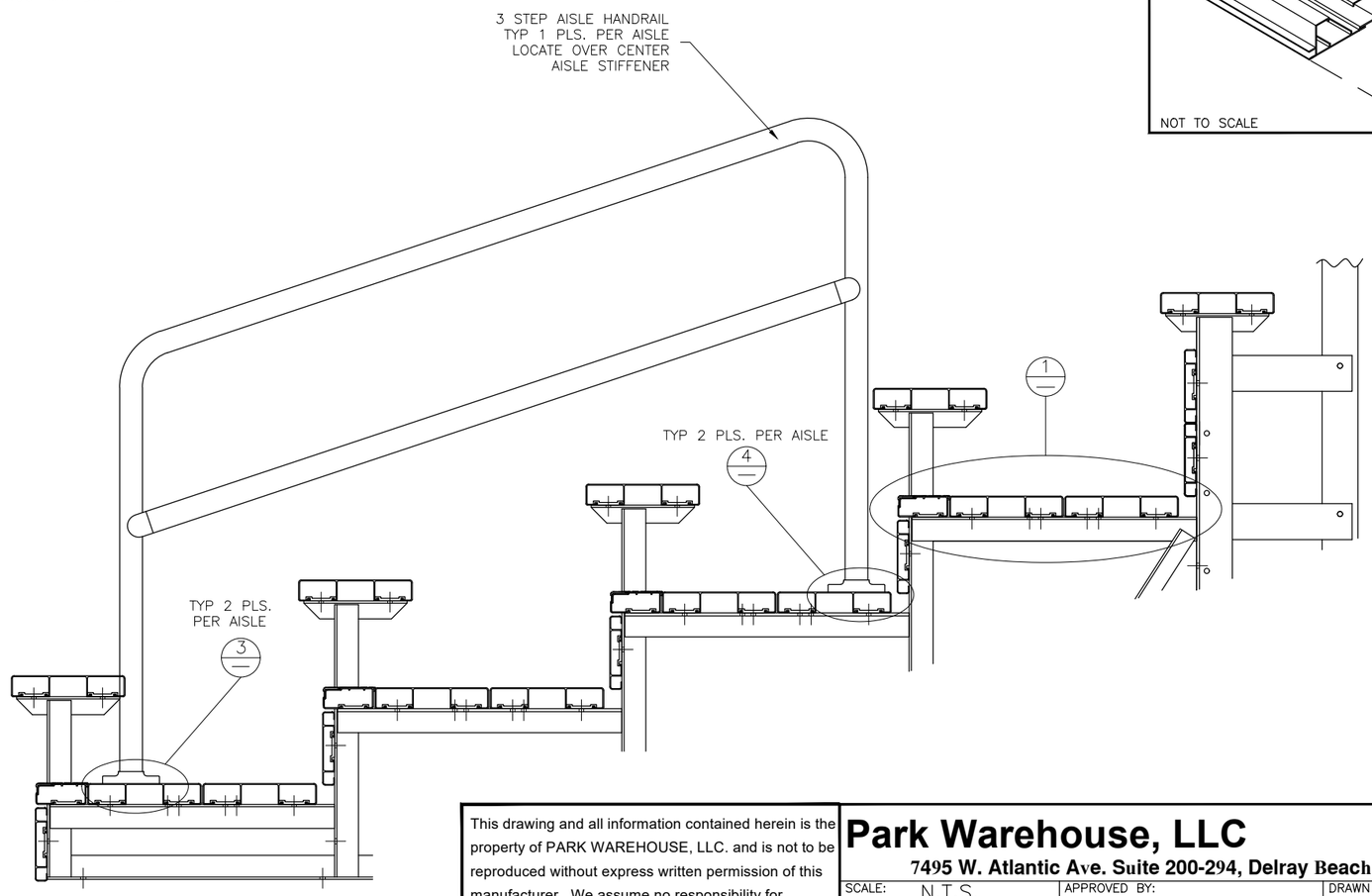

ALIGN EDGE OF FLANGE APPROX. 1/2" FROM THE LEADING EDGE OF THE FRONTMOST CONTINUOUS 2x10 FOOT PLANK (NOT THE 2x5 AISLE STEP PLANK). SLIGHTLY ADJUST FLANGE LOCATION, IF NECESSARY, SO THAT THE BOLT HOLE IS NOT DRILLED INTO A VERTICAL LEG OF THE PLANK. DRILL ø7/16" HOLES (FOR 3/8" BOLT). ASSEMBLE AS SHOWN USING GALV. STEEL BOLTS, FLAT WASHERS & FLANGE NUTS.

This drawing and all information contained herein is the property of PARK WAREHOUSE, LLC. and is not to be reproduced without express written permission of this manufacturer. We assume no responsibility for unauthorized use of this drawing. PARK WAREHOUSE, LLC. is not responsible for local permits and occupancy requirements.

Park Warehouse, LLC
7495 W. Atlantic Ave. Suite 200-294, Delray Beach, FL 33446

SCALE: N.T.S.	APPROVED BY:	DRAWN BY: IMP
DATE: 12/27/16		
TITLE: 5 ROW VERTICAL AISLE ASSEMBLY		
BLEACHER MODEL #: 335bl610-3-DLX-CLC		DRAWING NUMBER: VA.1

1 REAR GUARDRAIL POST ATTACH.

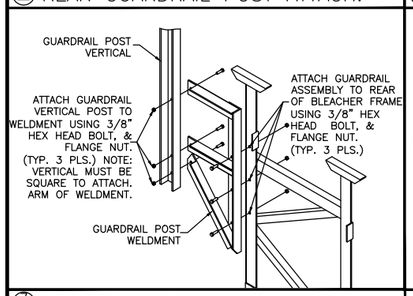

2 SIDE GD. RAIL POST INSTALLATION

*NOT TO SCALE

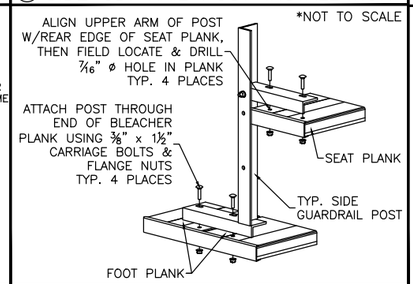

3 TENSION BAND ATTACHMENT

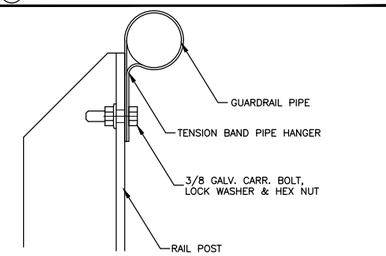

TENSION BAND TURN UP ON TOP RAIL ONLY

NOT TO SCALE

4 VERT. PIPE DETAIL–REAR, TOP

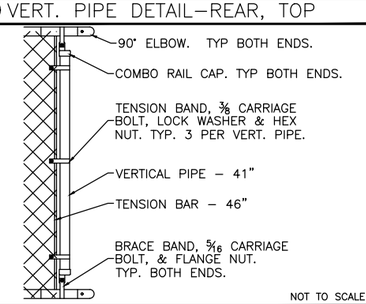

NOT TO SCALE

5 VERT. PIPE DETAIL (SIDE, TOP)

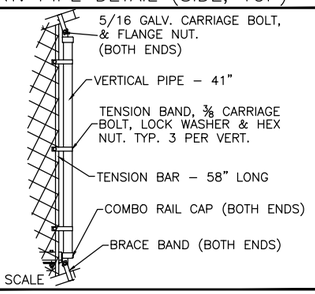

NOT TO SCALE

6 VERT. PIPE DETAIL (NE–SIDE,BOTT.)

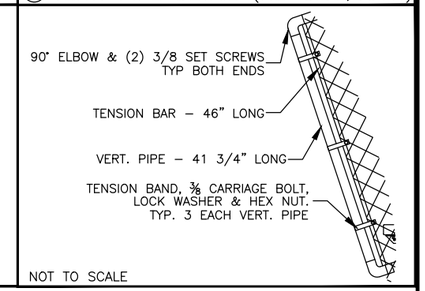

NOT TO SCALE

7 LOWER PIPE BRACKET ATTACH.

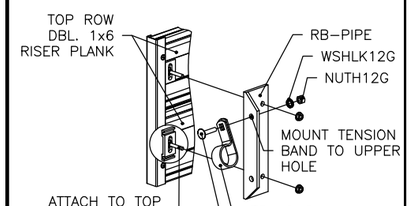

NOT TO SCALE

REAR GUARDRAIL

(REAR VIEW)

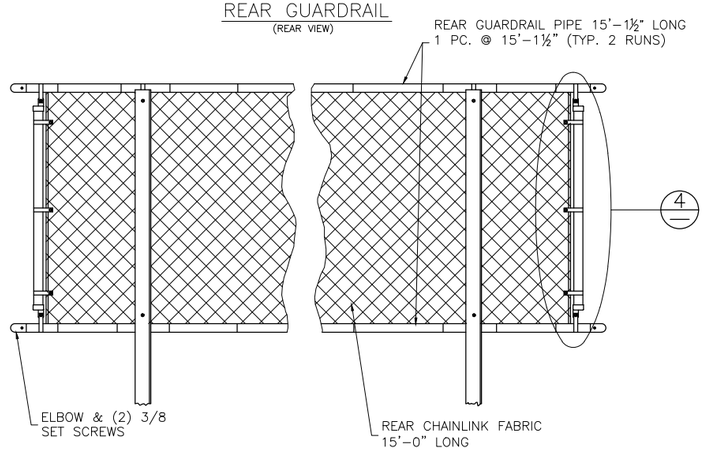

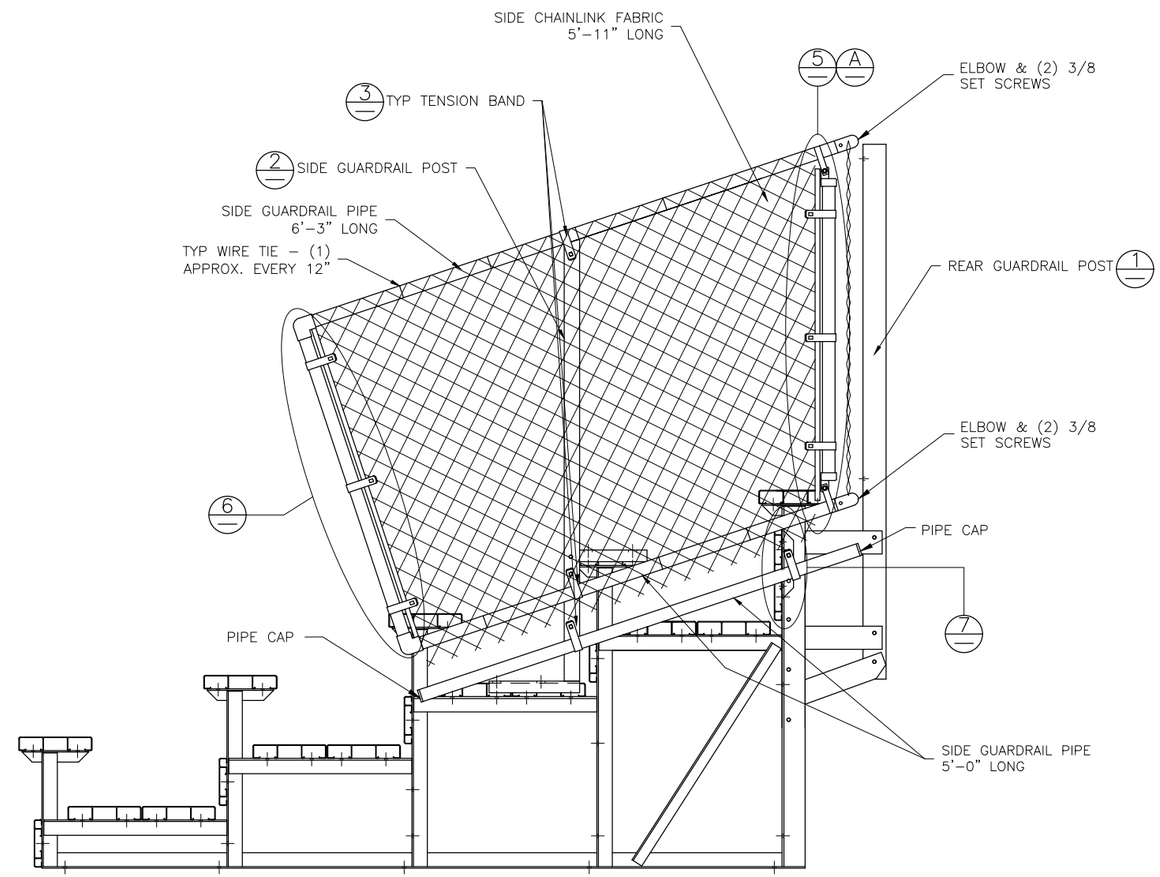

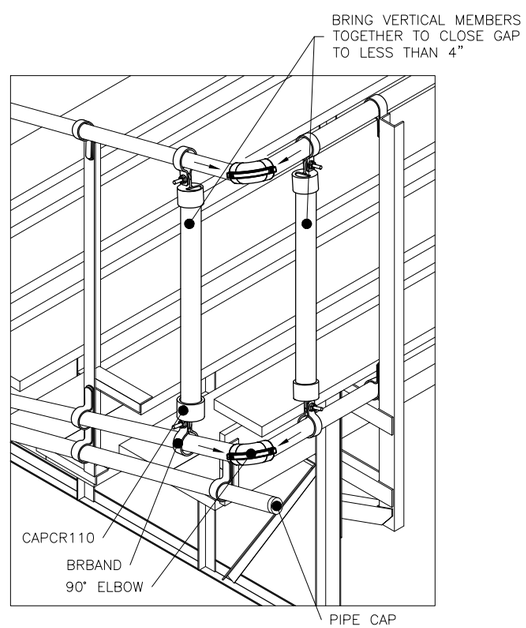

DETAIL "A" - REAR CORNER GUARDRAIL ASSEMBLY

This drawing and all information contained herein is the property of PARK WAREHOUSE, LLC. and is not to be reproduced without express written permission of this manufacturer. We assume no responsibility for unauthorized use of this drawing. PARK WAREHOUSE, LLC. is not responsible for local permits and occupancy requirements.

Park Warehouse, LLC
7495 W. Atlantic Ave. Suite 200-294, Delray Beach, FL 33446

SCALE: N.T.S.	APPROVED BY:	DRAWN BY: IMP
DATE: 12/27/16		
TITLE: 5 ROW X 15'–0" GUARD RAIL ASSEMBLY		
BLEACHER MODEL #: 335bl610-3-DLX-CLC		DRAWING NUMBER: GR.1