Baseline Collegiate 180º Competition - Basketball Goal for 42" Backboards

SKU: 685se920

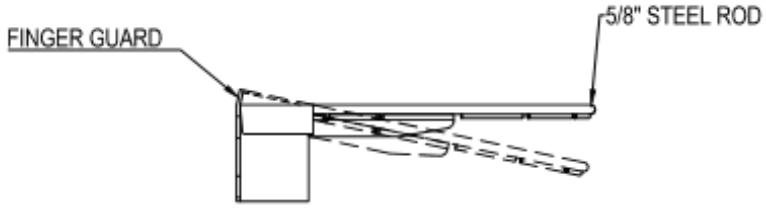

SIDE

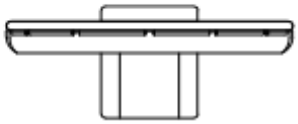

FRONT

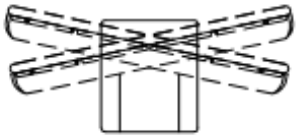

FULL 180° BREAKAWAY

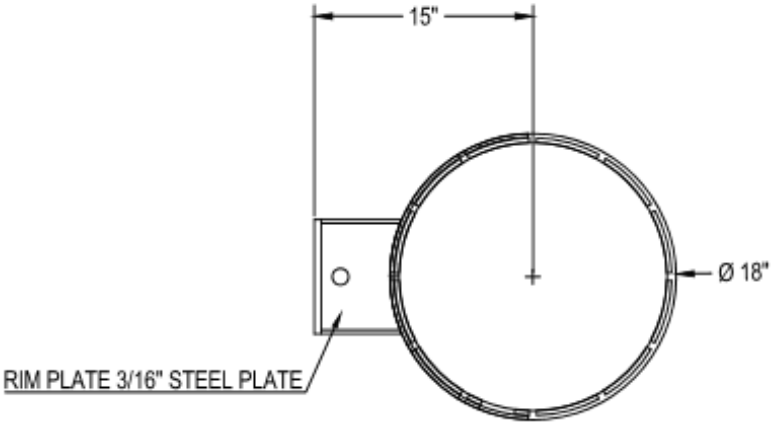

TOP

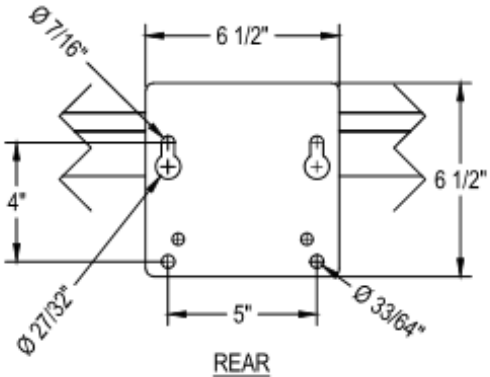

REAR

Goal shall be designed and constructed so that when downward pressure exceeding the release pressure setting is applied at any location within 90° either to the left or to the right of the point on the ring farthest from the backboard, the entire ring assembly will pivot downward. The release pressure setting shall be field adjustable and be designed with a detent style positive lock mechanism so that the ring cannot be released until the setting pressure is exceeded. Ring shall be constructed of 5/8" diameter AISI 1018 cold drawn carbon steel. Tubular segments shall be spaced and welded a full 360° around the lower surface of the 5/8" ring to allow the goal net to be securely attached without fasteners by means of a single nylon cord. All steel components that come in contact with other steel components during release of the ring assembly shall be heat treated to a minimum depth of 2/100" and hardness of 50 on the Rockwell “C” scale. Goal shall meet all applicable NCAA, FIBA and National High School Federation rules including NCAA Men's Division I rule regarding rebound elasticity testing. Release mechanism shall be isolated from player contact and pinch point risk by means of a steel coverplate. Backplate shall have a 5" wide x 4" high, 4-hole mounting pattern to facilitate attachment to all 72" x 42" high backboards. All goals shall have an orange powder coat finish and include anti-whip nylon net, zinc plated grade 5 mounting hardware, two (2) net attachment cords and have a 3-year repair or replacement warranty. For replacement net cords order BA35ARC. Goals without positive lock mechanisms, without 360° tubular style net attachment or that do not release at all points along the front 180° circumference of the ring shall not be considered equal. Made in USA. Rim shall weigh approximately 39#. Installation to be completed in accordance with manufacturer's instructions. Do not scale drawings.