Floating Floor Socket - w/ Hinged Brass Cover Plate

SKU: 685se810-3

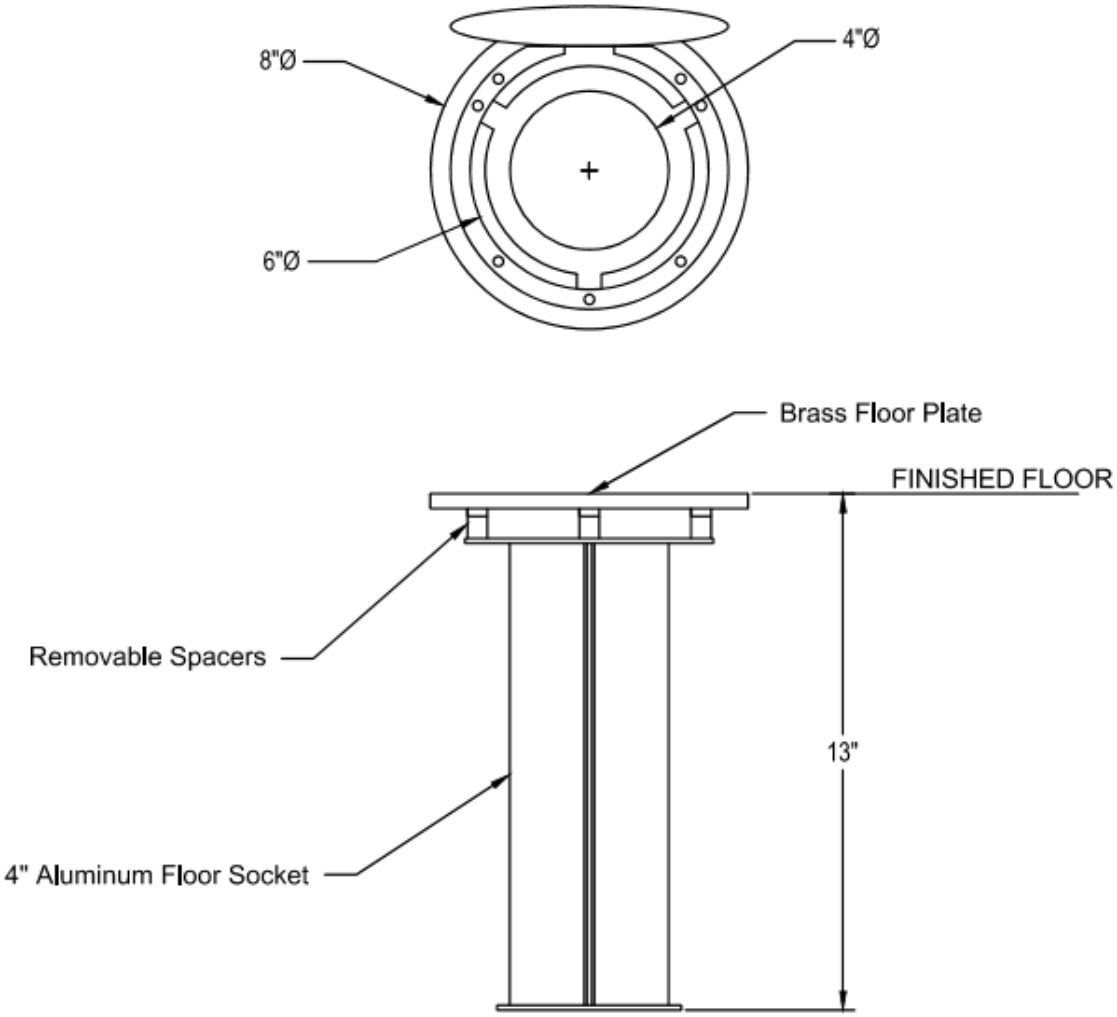

Floor sockets shall be extruded aluminum with an interior diameter of 4". Cover plates shall be constructed of machined cast brass with a hinged lid with a minimum opening of 6". Three nylon spacers shall allow the socket to be installed perpendicular or slightly angled in relationship to the floor. When assembled for installation, the assembly shall be fixed for a socket depth of 13" from the finished floor to the bottom of the socket. Installation to be completed in accordance to manufacturer's instructions. Do not scale drawings. Each assembly shall weigh approximately 8#.