Soccer & Football Aluminum Goals

SKU: 685se525 Specs

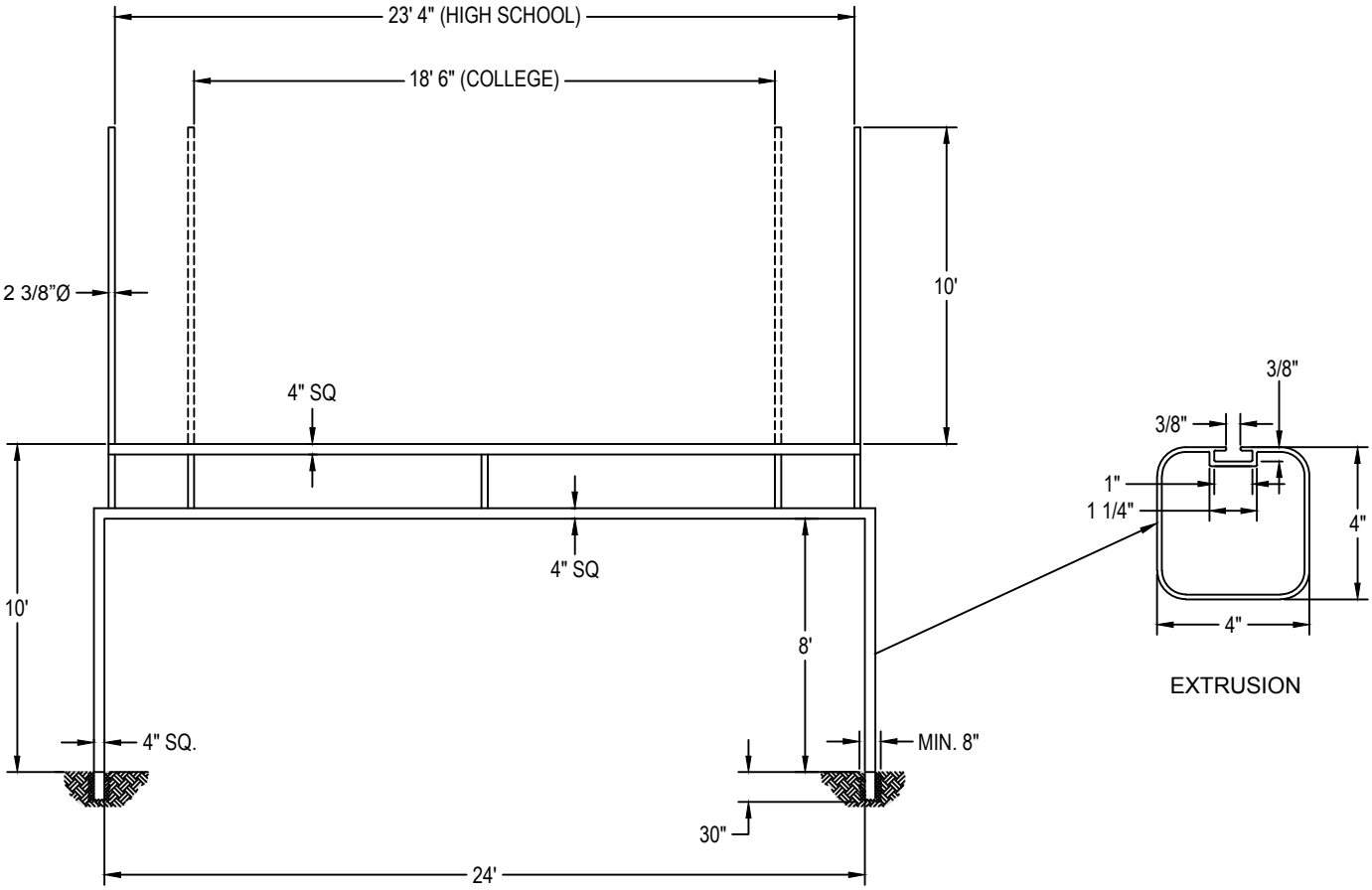

Face of soccer goal shall be constructed of 4" square aluminum extrusions with a minimum 3/4" corner radii for safety and a minimum 1/8" wall thickness. Extrusions shall have a net track extruded in the rear face to allow net attachment using specially designed clips included with each system. Goal shall have a 24' wide and 8' high opening. 2 3/8" diameter aluminum football uprights shall extend 10' above the official 10' high horizontal football crossbar and be capable at being installed at either the official 23' 4" high school or 18' 6" college width. Design shall allow for 24" of upright to be permanently buried in a 30" deep footing or installed in optional SC44S ground sleeves. All components shall be finished with a textured white polyester powder coated finish. Goals shall carry an 8-year limited warranty. Installation to be completed in accordance to manufacturer's instructions. Do not scale drawings. System shall weigh approximately 500#/pair.