Park Classic Bench

4 Foot
Black Bench
Frame Weathered Wood
Planks

The Park Classic Bench is designed for stability and comfort, constructed using 2 x 4's with rounded bullnose edges on the outside planks. Made from 100% post-consumer recycled plastic, it comes in a choice of 3 colors for the rounded top bench-end frames with 7 colors of planks.

6 Foot - Brown
Bench Frame Cedar
Planks

8 Foot - Green
Bench Frame Sand
Planks

The Park Classic Bench is ideal for engraving up to 3 lines of text.

See back of page for details and measurements

Park Classic Bench - 4', 6' & 8'

Side View
(all sizes)

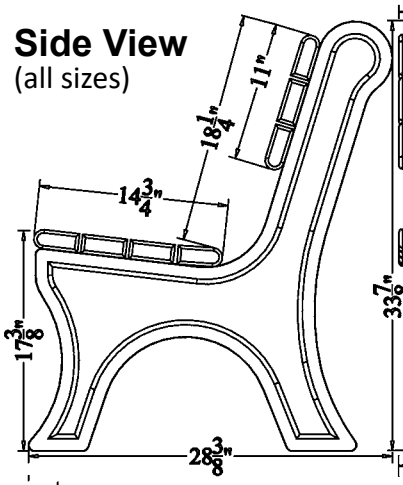

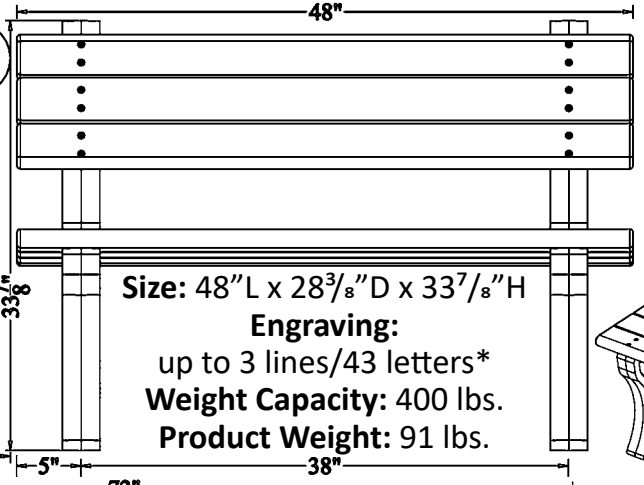

Size: 48"L x 28 3/8"D x 33 7/8"H
Engraving:
up to 3 lines/43 letters*
Weight Capacity: 400 lbs.
Product Weight: 91 lbs.

4 Ft.

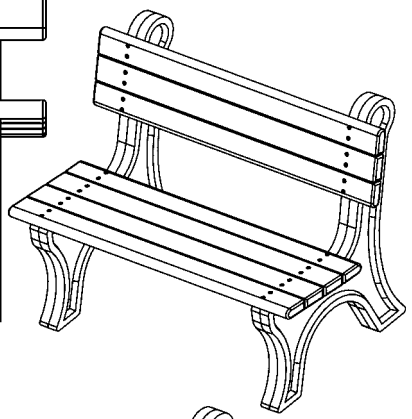

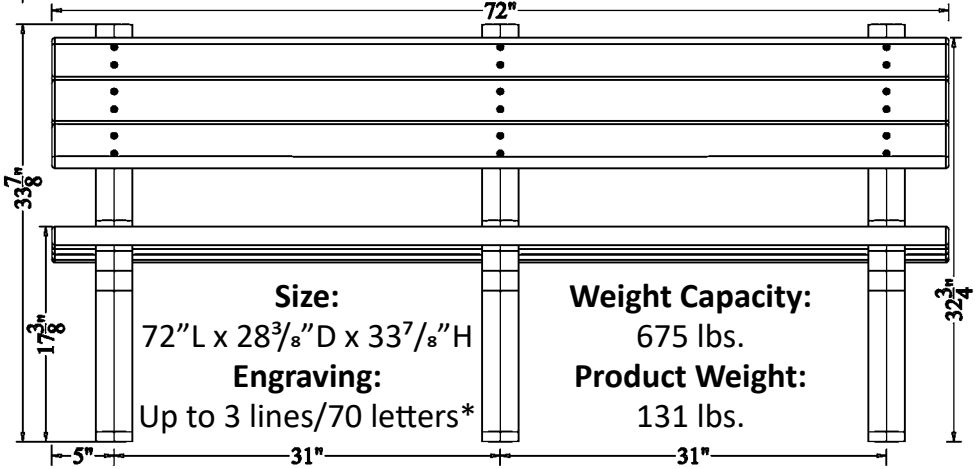

Size:
72"L x 28 3/8"D x 33 7/8"H
Engraving:
Up to 3 lines/70 letters*

Weight Capacity:
675 lbs.
Product Weight:
131 lbs.

6 Ft.

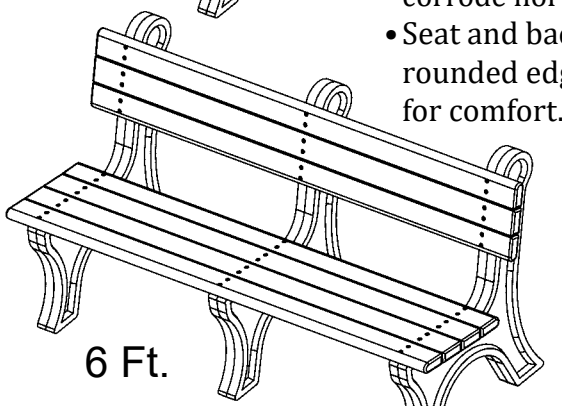

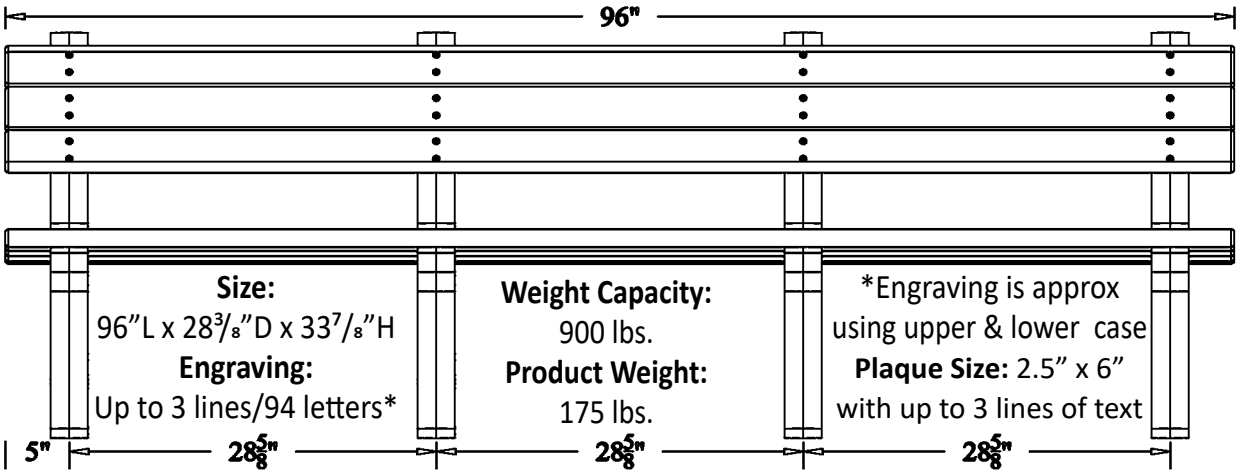

Size:
96"L x 28 3/8"D x 33 7/8"H
Engraving:
Up to 3 lines/94 letters*

Weight Capacity:
900 lbs.
Product Weight:
175 lbs.

*Engraving is approx using upper & lower case
Plaque Size: 2.5" x 6"
with up to 3 lines of text

8 Ft.

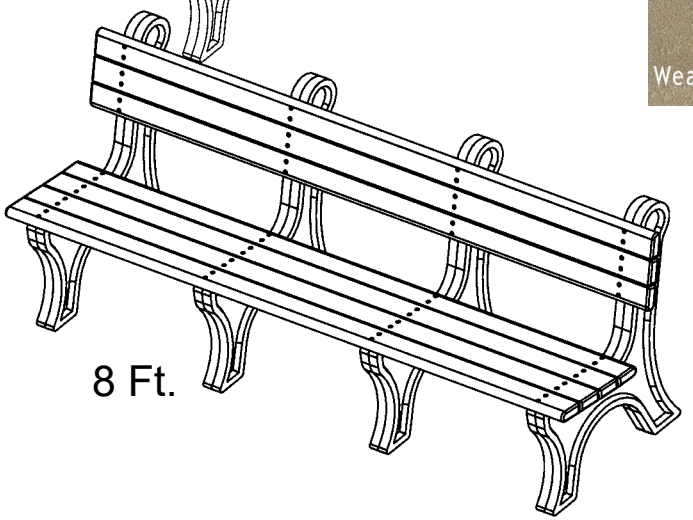

Available Frame Colors:

- Heavy duty/weather resistant/ maintenance free!
- No need to stain or paint
- Resists fading, peeling and graffiti as the color is molded all the way through
- Can be surface mounted with brackets (sold separately)
- Stainless steel fasteners do not corrode nor rust
- Seat and back use 2 x 4's with rounded edges on outside edges for comfort. and safety.

Available Plank Colors:

Park Classic Bench w/Arms

The Park Classic Bench is designed for stability and comfort, constructed using 2 x 4's made with the outside planks with rounded edges. Made from 100% post-consumer recycled plastic, it comes in a choice of 3 colors for the rounded top bench-end frames with 7 colors of planks.

4 Foot
Black Bench Frame
Charcoal Planks

6 Foot - Green
Bench Frame - Sand Planks

8 Foot
Brown Bench Frames
Weathered Wood Planks

The Park Classic Bench is ideal for engraving up to 3 lines of text.

See back of page for details and measurements

Park Classic Bench w/Arms - 4', 6' & 8'

Side View

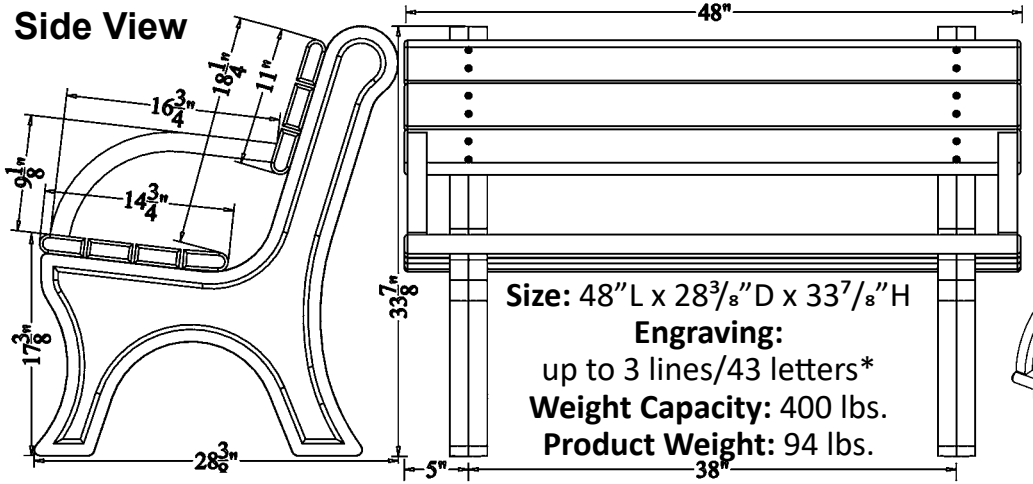

Size: 48"L x 28 3/8"D x 33 7/8"H
Engraving:
up to 3 lines/43 letters*
Weight Capacity: 400 lbs.
Product Weight: 94 lbs.

4 Ft.

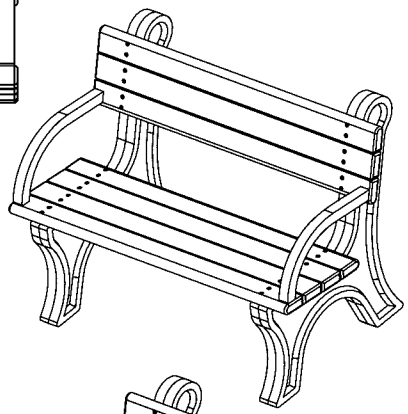

Available Frame Colors:

Available Plank Colors:

- Heavy duty/weather resistant/ maintenance free!
- No need to stain or paint
- Resists fading, peeling and graffiti as the color is molded all the way through
- Can be surface mounted with brackets (sold separately)
- Stainless steel fasteners do not corrode nor rust
- Seat and back use 2 x 4's with rounded edges on outer planks for comfort. and safety.

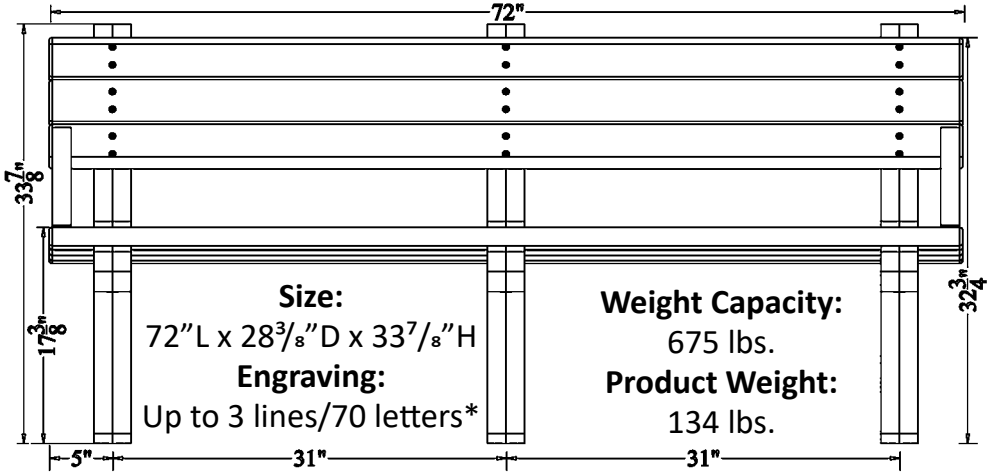

Size:
72"L x 28 3/8"D x 33 7/8"H
Engraving:
Up to 3 lines/70 letters*

Weight Capacity:
675 lbs.
Product Weight:
134 lbs.

6 Ft.

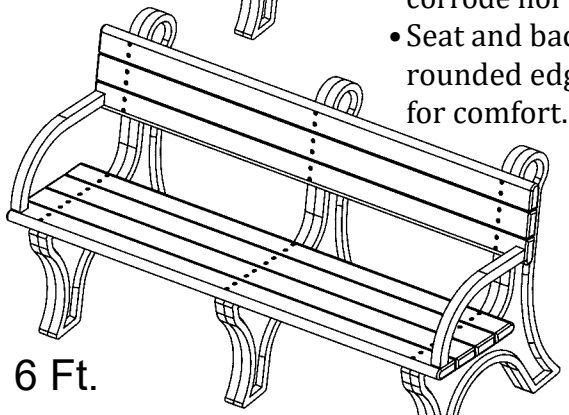

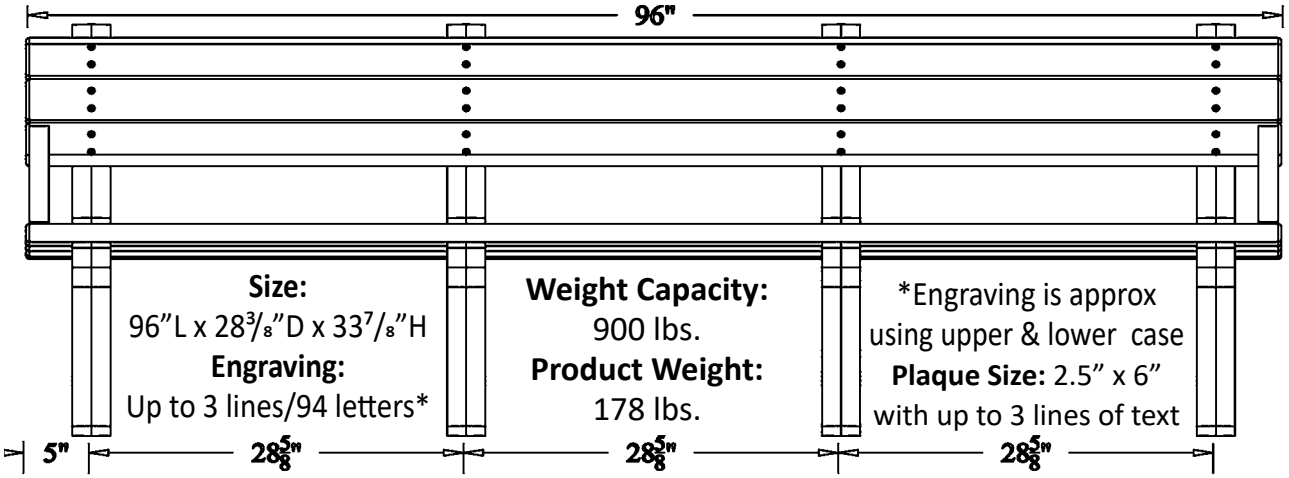

Size:
96"L x 28 3/8"D x 33 7/8"H
Engraving:
Up to 3 lines/94 letters*

Weight Capacity:
900 lbs.
Product Weight:
178 lbs.

*Engraving is approx using upper & lower case
Plaque Size: 2.5" x 6"
with up to 3 lines of text
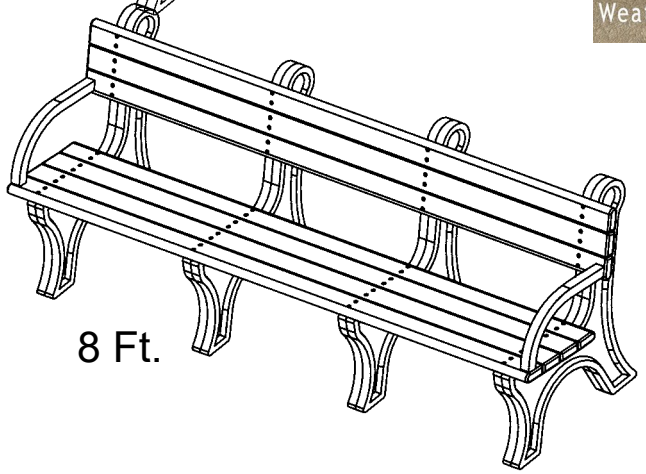
8 Ft.