3 Bike Vertical Rack

SKU: 537br100-2

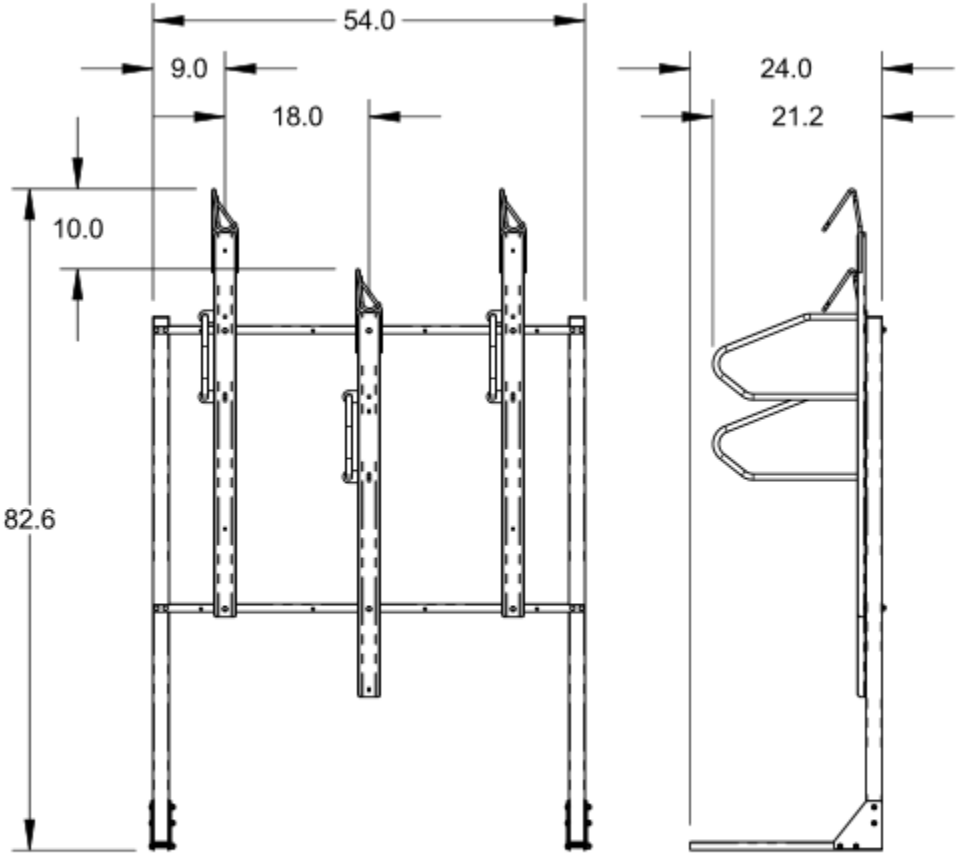

3 BIKE LOCKING RACK

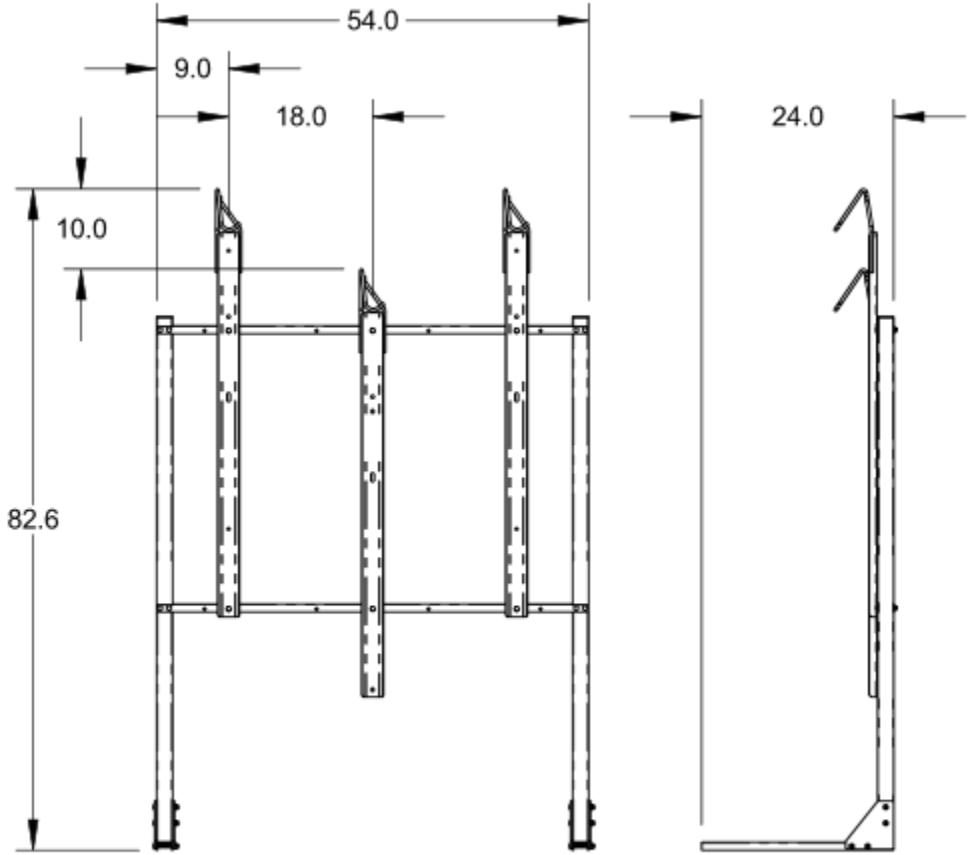

3 BIKE NON-LOCKING RACK