Premier Circular Tree Bench

SKU: N0Jbe100-4

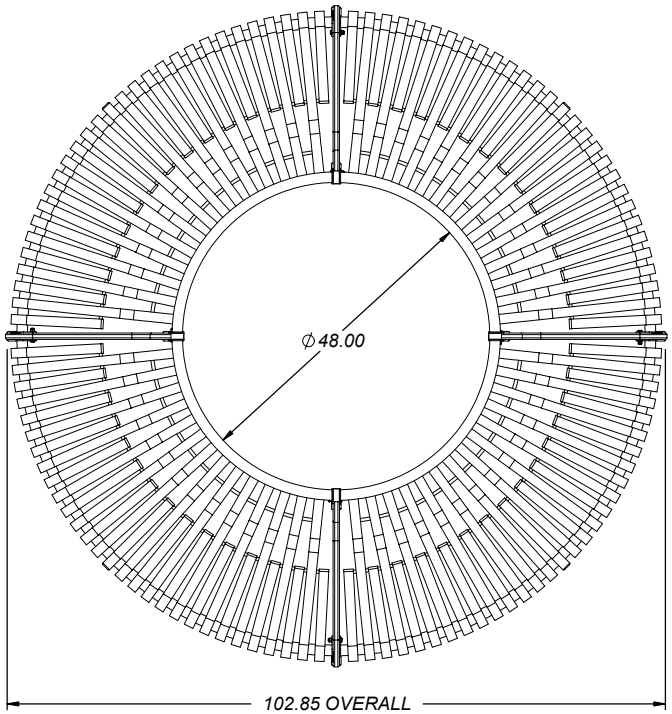

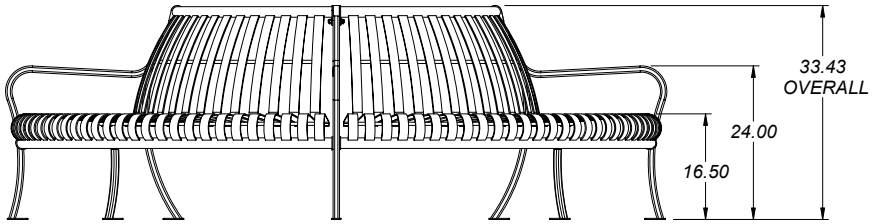

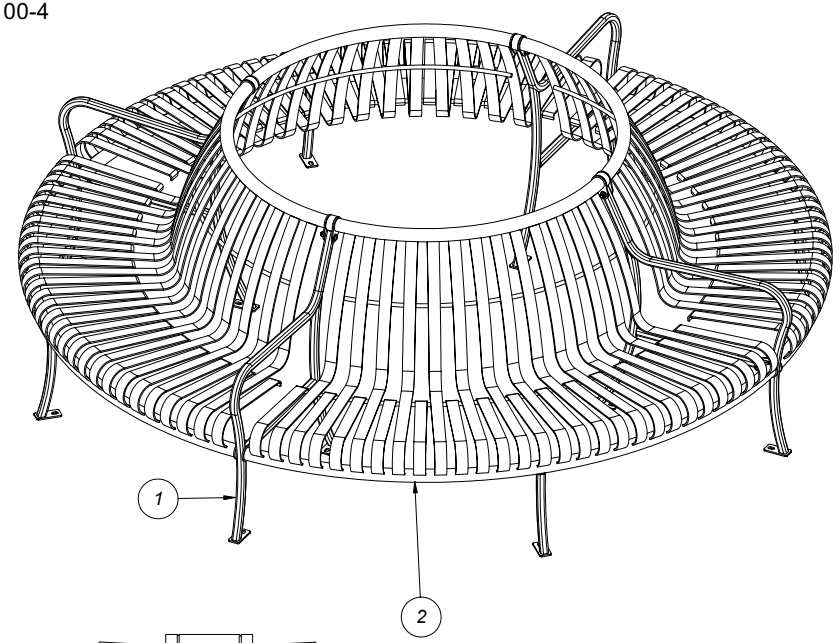

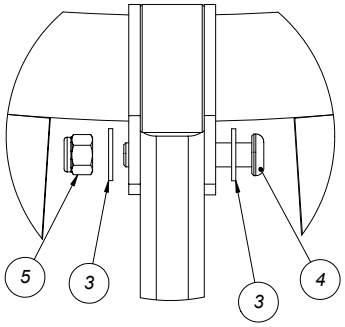

FASTENING DETAIL

MATERIAL SPECIFICATIONS:

SEAT SLATS - 3/16" x 1-1/2" HR FLAT BAR
FRAMES - 1" x 1/8" HSS SQUARE TUBE
CROSSBARS - 1.66 DIA x .125"
BRACING - 1/2" OD HR ROD

ITEM NO.	DESCRIPTION	PART NO.	QTY.
1	FRAME, PREMIER BENCH W/ BACK, CIRCULAR MODULAR	51148800	4
2	PREMIER SEAT WELD, STD. CIRC.	51145300	4
3	FLAT WASHER, 3/8 ANSI TYPE A SS	117005	16
4	3/8-16 x 2.00 BHCS 6 LOBE SS	104097	8
5	HEX NUT, NYLON LOCK, 3/8-16 SS	110030	8

UNLESS OTHERWISE SPECIFIED, DIMENSIONS ARE IN INCHES