Parts List
2-(A) Center Leg
1-(B) Top
2-(C) Seat
2-(D) Leg

Hardware
24 - 2-1/2" Stainless Steel Screws
8 - 2" Stainless Steel Screws

Tools Required
#2 Square Drive Bit
(Not Included)

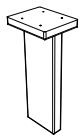

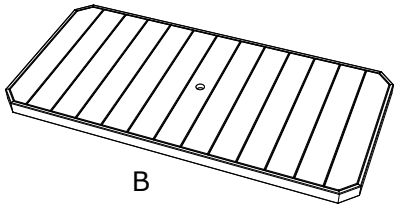

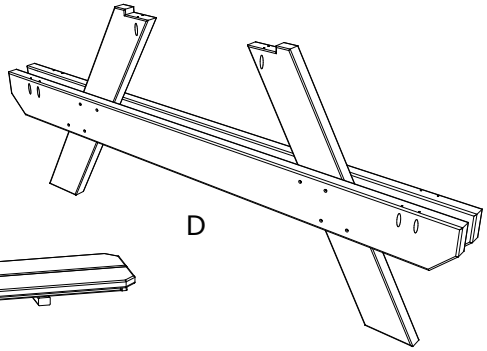

1. Place (C) Seat on a soft blanket to prevent Scratches. Attach (A) Center Leg to (C) Seat using 4 - 2" Stainless Screws per Leg in Predrilled Holes.

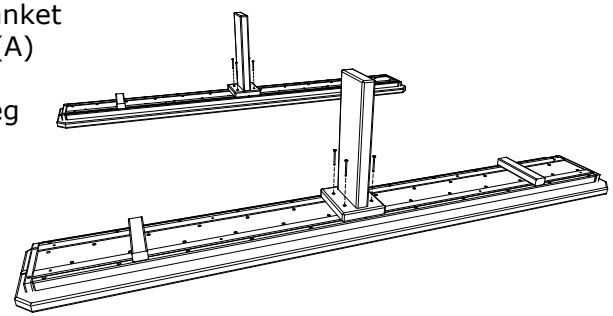

2. Attach (C) Seat to (D) Legs using 16 - 2-1/2" Stainless Screws in Predrilled Holes.

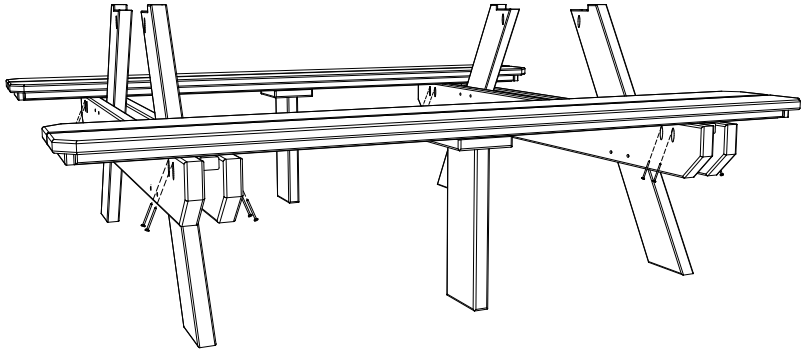

Attach (B) Top to (D) Legs Using 8 - 2-1/2" Stainless Screws in Predrilled Holes.

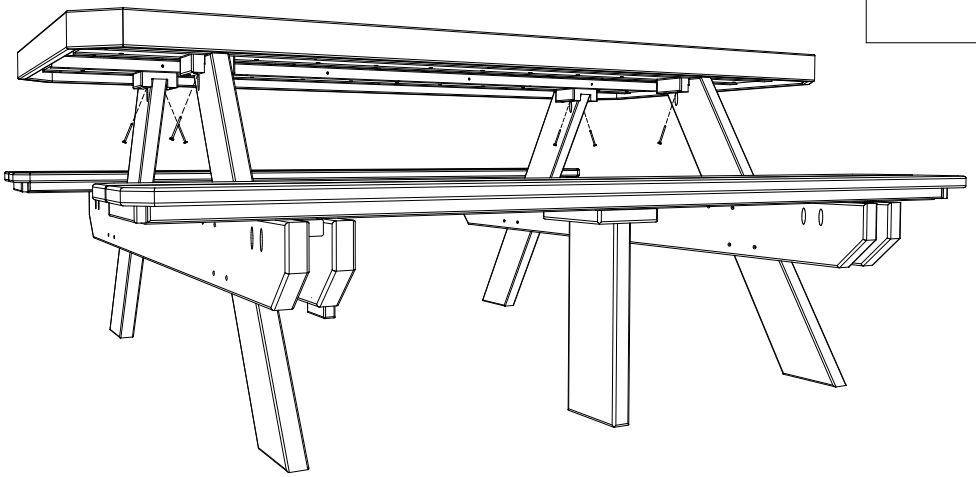

6' Rectangle Picnic Table Assembly Instructions

10/16/ 2017	R.M.