SWERVE RACK

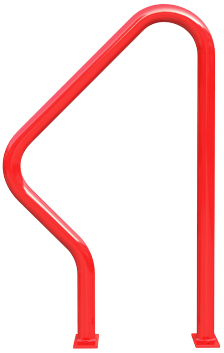

Simple Security. Simple Stability.

The Swerve Rack is a proven design that provides high security and easy bike parking. The Swerve Rack uses thick pipe construction and the full radius of the bend makes the Swerve an attractive and functional bike rack. The Swerve Rack supports the bicycle at two points and allows for the wheel and frame to be secured using a u-style bike lock. Each Swerve Rack parks two bikes.

554br360

YOUR LOGO HERE

Customize the Swerve Rack and brand your bike parking

FINISH OPTIONS

Galvanized

Stainless

PVC Dip

MOUNT OPTIONS

Surface

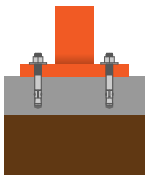

In-Ground

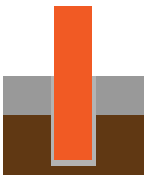

Powder Coat

White	Black	Light Gray RAL 7042	Deep Red RAL 3003	Yellow RAL 1023
CNH Bright Yellow	Orange RAL 2004	Blue RAL 5005	Sky Blue RAL 5015	Hunter Green RAL 6005
Light Green RAL 6018	Green RAL 6016	Sepia Brown RAL 8014	Bronze	Silver 9007
Dark Purple	Flat Black	Wine Red RAL 3005	Beige RAL 1001	Iron Gray 7011

Thermoplastic

Black	Green	Red	Blue	Gray	Brown

Rail

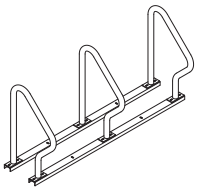

SWERVE RACK

Submittal Sheet

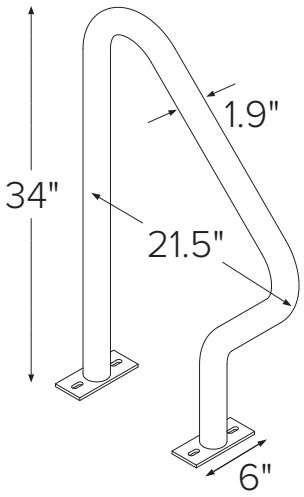

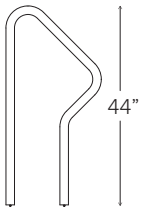

In-ground

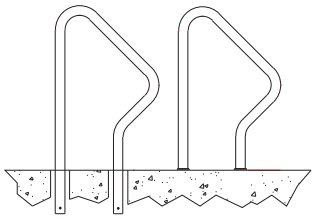

In-ground *Surface*

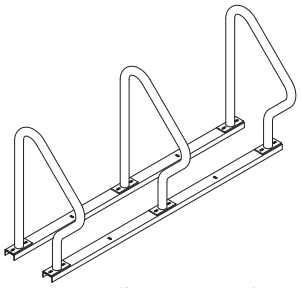

Rail (freestanding)

CAPACITY 2 Bikes

MATERIALS

☐ **Standard**
1.9” OD schedule 40 pipe

☐ **Lightweight**
1.9” OD schedule 10 pipe

FINISHES

☐ **Galvanized**
An after fabrication hot dipped galvanized finish is our standard option. 250 TGIC powder coat colors, thermoplastic coating, PVC dip, and stainless steel finishes are also available as alternate options.

☐ **Powder Coat**
Our powder coat finish assures a high level of adhesion and durability by following these steps:
1. Sandblast
2. Epoxy primer electrostatically applied
3. Final thick TGIC polyester powder coat

☐ **Thermoplastic**
In addition to an increased thickness (8-10mils), the thermoplastic finish covers a galvanized layer and offers superior impact resistance over powder coating.

☐ **Stainless**
Stainless Steel: 304 grade stainless steel material finished in either a high polished shine or a satin finish.

MOUNT OPTIONS

☐ **In-ground**
In ground mount is embedded into concrete base. Specify in ground mount for this option.

☐ **Surface**
Foot Mount has two 2.5”x6”x.25” feet with two anchors per foot. Specify foot mount for this option.

☐ **Rail**
Rail Mounted Swerve Racks are bolted to two parallel rails which can be left freestanding or anchored to the ground. Rails are heavy duty 3”x1.4”x3/16” thick galvanized mounting rails. Specify rail mount for this option.

SWERVE RACK

Setbacks

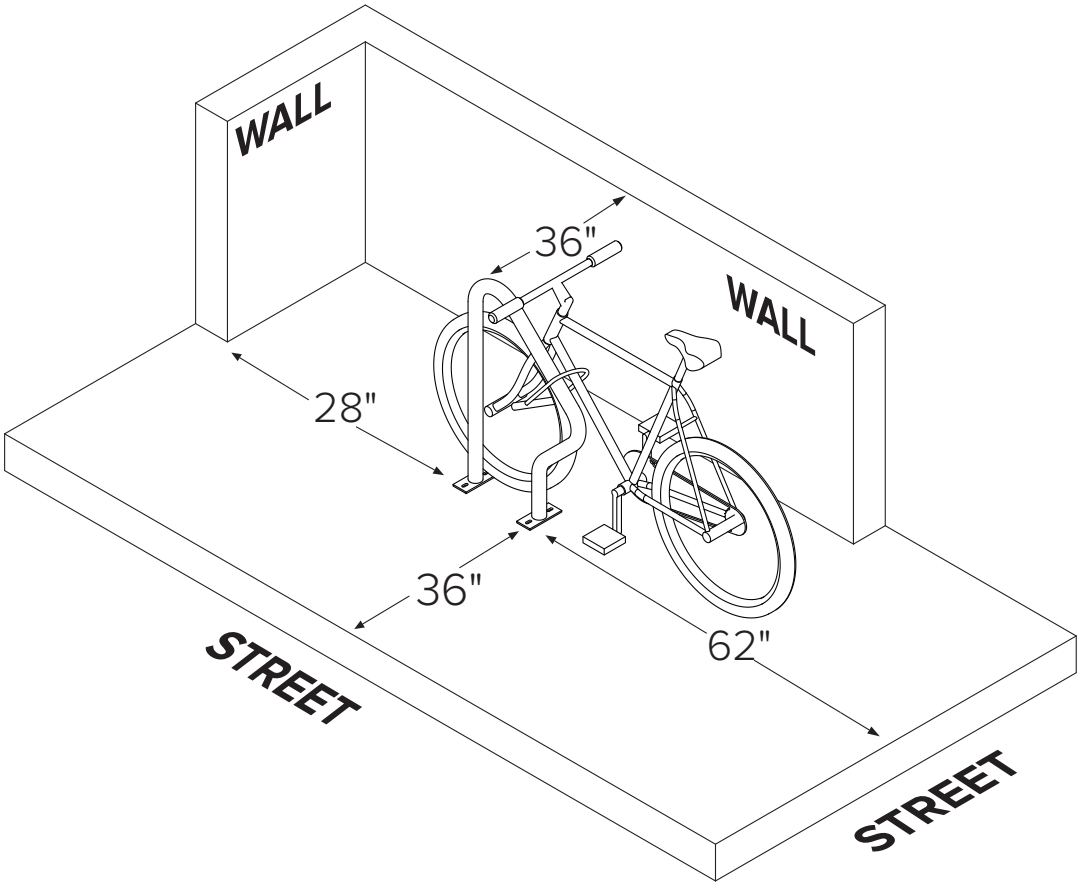

PARK WAREHOUSE

SWERVE RACK

Installation Instructions – Surface Mount

TOOLS NEEDED

Tape Measure
Marker or Pencil
Masonry Drill Bit
Drill (Hammer drill recommended)
Hammer
Wrench 9/16”
Level

RECOMMENDED BASE MATERIAL

Solid concrete is the best base material for installation. To ensure the proper anchors are shipped with your rack, ask your representative which anchor is appropriate for your application. Be sure nothing is underneath the base material that could be damaged by drilling.

1

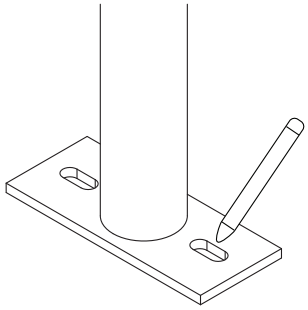

Place the rack in the desired location. Use a marker or pencil to outline the holes of the flange onto the base material.

2

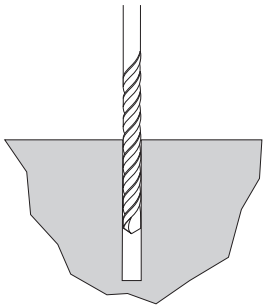

Drill 3/8” diameter holes 3” deep into surface. Make sure the holes are at least 3” away from any cracks in the base material.

3

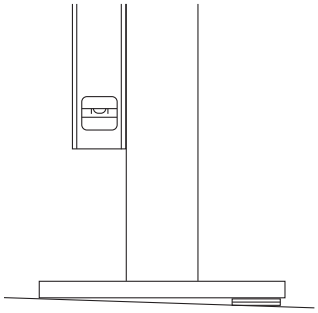

Place rack (and washers to level rack if necessary) over holes.

4

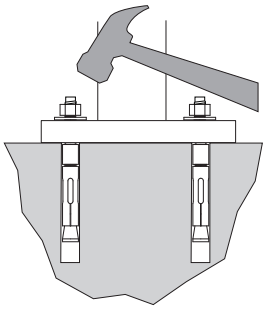

Thread nuts onto anchors, leaving approximately 1/4” of the anchor protruding, and tap into surface. Tighten nuts down to secure rack.

SWERVE RACK

Installation Instructions – In Ground Mount

TOOLS NEEDED

Level
Cement mixing tub
Shovel
Trowel
Hole coring machine with 4” bit
Access to water hose
Materials to build brace (see “Install Tip” at bottom of page)

INSTALLING INTO EXISTING SIDEWALK

Core holes no less than 3” diameter (4” recommended) and 10” deep into sidewalk. Fill holes with Por-Rok or epoxy grout. Place rack into holes, making sure the rack is level. 33”-36” of the rack should remain above the surface. If the rack is less than 33” high, it will not support the bike adequately. Make sure the rack is level and held in place until the grout has set.

INSTALLING INTO A NEW SIDEWALK

1

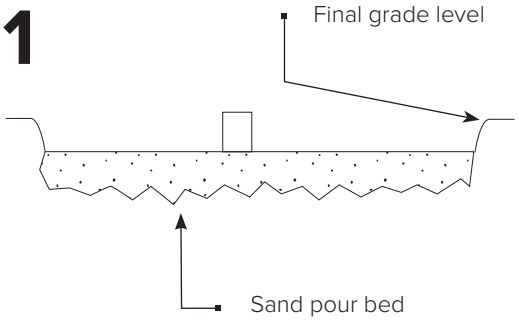

Place corrosion resistant sleeve (min. 3” inside diameter) in sand pour bed in exact location where rack will be installed. Make sure top of sleeve is at same level as desired finished concrete surface. Fill sleeve with sand to keep it in place and prevent it from filling with concrete.

2

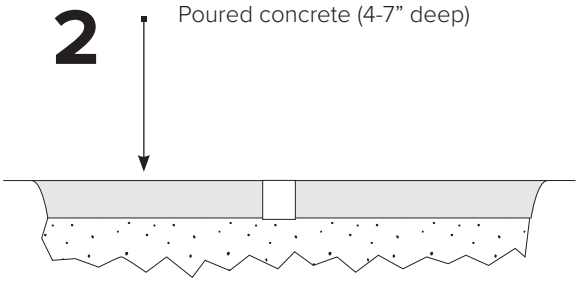

Pour concrete and allow to cure.

3

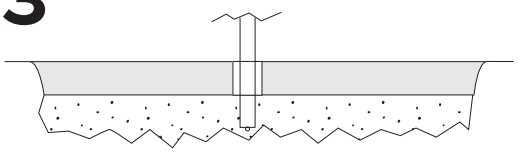

After appropriate cure time, dig out sand from sleeves and insert racks, making sure they are level and at the appropriate height. Pour in Por-Rok or epoxy grout and allow to set.

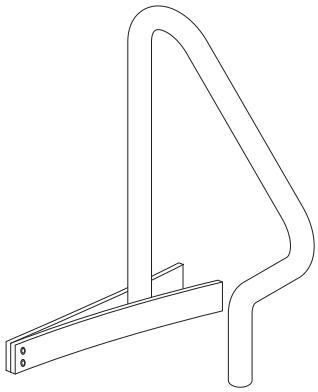

INSTALL TIP

An easy way to brace the rack while the grout sets is to bolt two 1x4” boards together at one end and clamp them onto the rack like a clothes pin.

SWERVE RACK

Rail Mounted Options

RAIL MOUNTED SWERVE RACKS

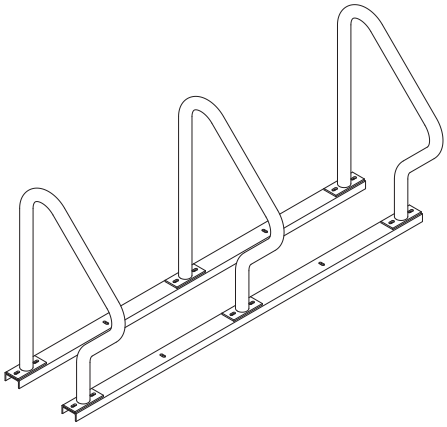

Rail mounted Swerve Racks are standard foot mounted Swerve Racks attached with bolts to a rail as in the diagram at left. Rail mounted racks provide more flexibility than other mounting options while providing the same degree of security.

Rail mounted Swerve Racks can be left freestanding, or they can be anchored to the ground using several anchors. This option allows for easier snow removal and sweeping. Installation of Rail mounted Swerves is also much less expensive than embedding the racks into the ground.

* Note: Though racks may be painted, the rails will remain with only a galvanized finish

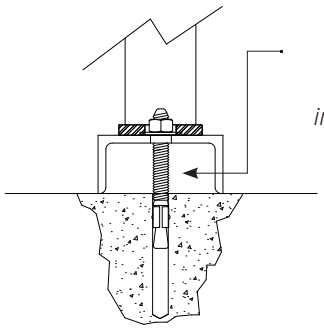

ADVANTAGES:

- Easier and inexpensive installation
- Can be left freestanding or anchored to the ground
- Easier to remove for sweeping and snow removal

APPLICATIONS:

- Installation to pavers
- Asphalt Installations
- Ground, dirt, or mulch
- Situations where the rack needs to be moved occasionally

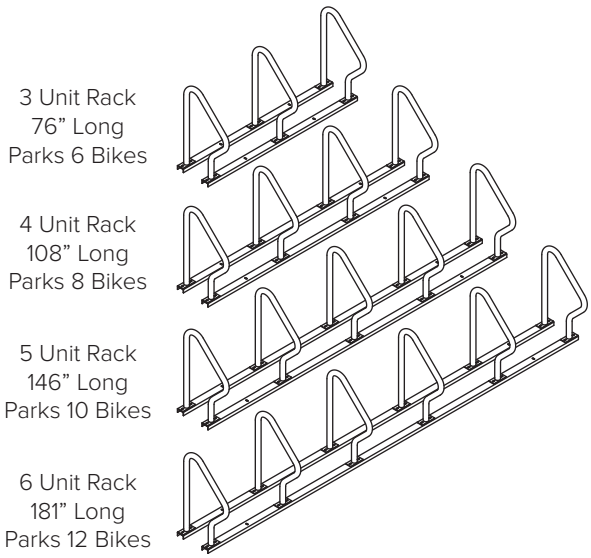

PARK WAREHOUSE

SWERVE RACK

Installation Instructions

TOOLS NEEDED

9/16” Socket set
Two 4”x4”x28” (or larger) blocks
4 bolts, nuts and washers for every Swerve (included with rack). If using a tamper resistant nuts, install two tamper resistant nuts with each rack.

ANCHORING THE RAILS

To anchor the rails to concrete, place 3.75” wedge anchor through holes in the rail into the concrete. Secure with nut.

1

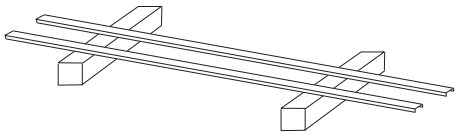

Lay out the two channel beams where the rack will be placed. Place the two beams on top of the two blocks of wood so that the open part of the channel faces the ground.

2

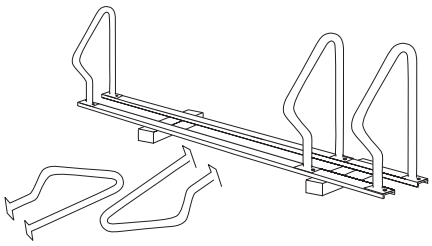

Place Swerve Racks on beams so holes in rack flanges line up with beam slots

3

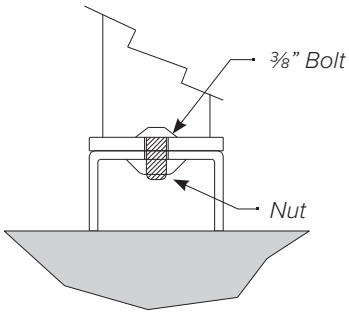

Put bolts through Swerve Rack flange holes and beams so bolt head faces up. HAND tighten the nuts using new flange nuts.

4

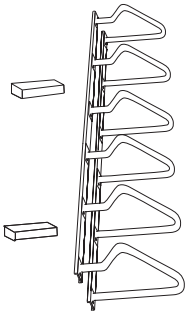

Once nuts are on, tip assembled rack over and use a 9/16” socket to tighten nuts. Before fully tightening nuts, make sure the racks are straight on beams. If using tamper resistant nuts, use access tool to tighten nuts. Do not overtighten the tamper resistant nuts. Tip rack upright.