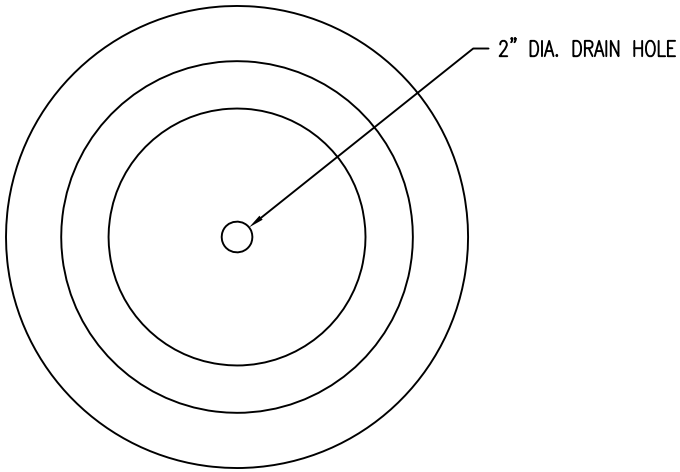

1 TOP VIEW

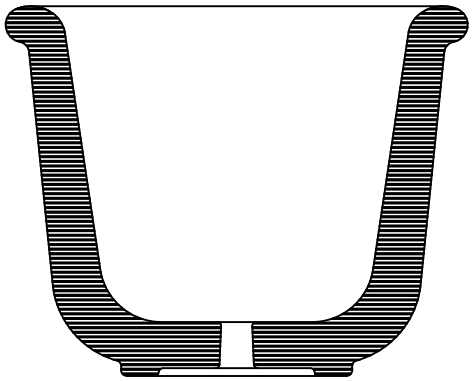

4 CROSS SECTION

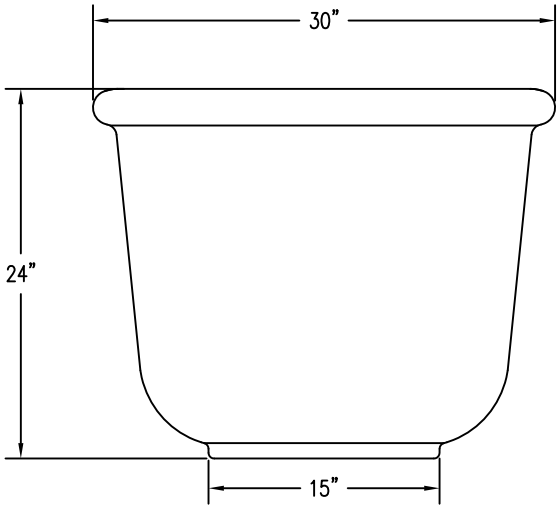

2 ELEVATION VIEW

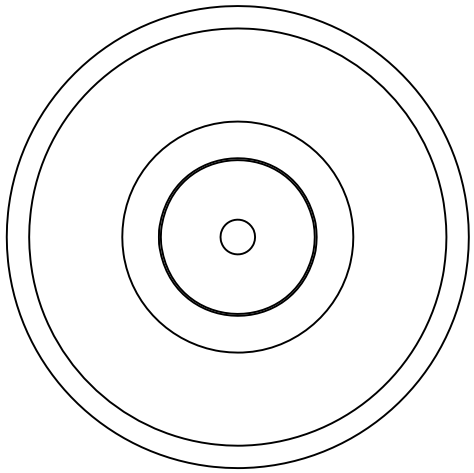

3 BOTTOM VIEW

PROPRIETARY AND CONFIDENTIAL

THE INFORMATION CONTAINED IN THIS DRAWING IS THE SOLE PROPERTY OF Park Warehouse, LLC. 5301 North Federal Highway, Suite 140, Boca Raton, FL. ANY REPRODUCTION IN PART OR AS A WHOLE WITHOUT THE WRITTEN PERMISSION OF Park Warehouse, LLC. 5301 North Federal Highway, Suite 140, Boca Raton, FL. IS PROHIBITED.

Sheet # TF4054