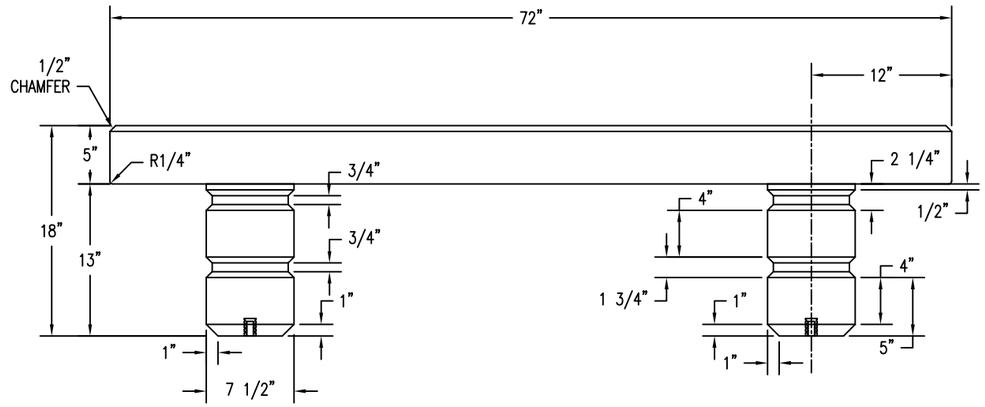

1 FRONT & BACK ELEVATION VIEW

Scale: 1/8" = 1"

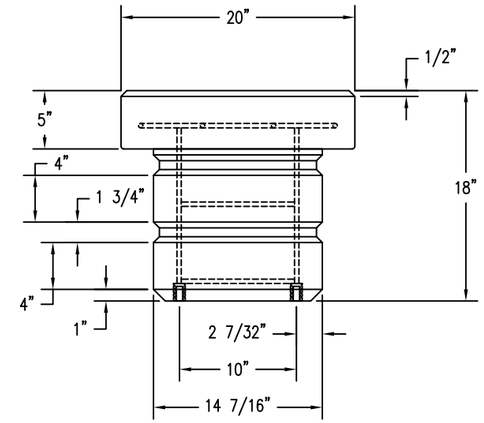

3 END ELEVATION VIEW

Scale: 1/8" = 1"

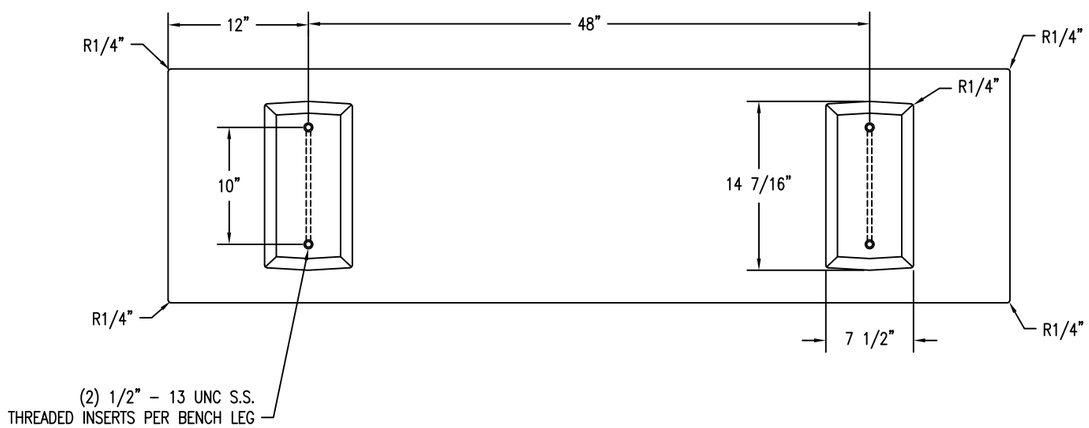

2 BOTTOM VIEW

Scale: 1/8" = 1"

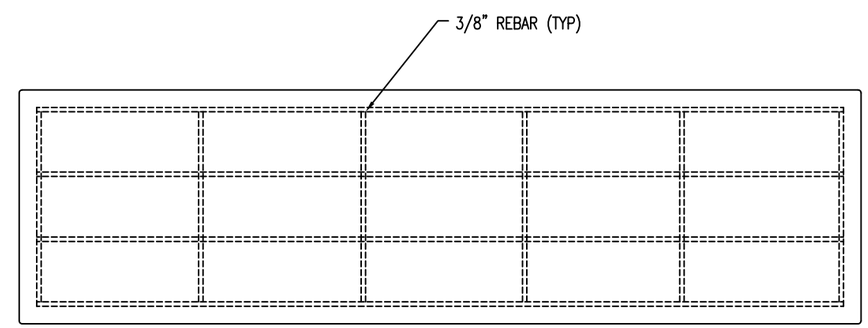

4 TOP VIEW

Scale: 1/8" = 1"

PROPRIETARY AND CONFIDENTIAL

THE INFORMATION CONTAINED IN THIS DRAWING IS THE SOLE PROPERTY OF Park Warehouse, LLC. 5301 North Federal Highway, Suite 140, Boca Raton, FL. ANY REPRODUCTION IN PART OR AS A WHOLE WITHOUT THE WRITTEN PERMISSION OF Park Warehouse, LLC. 5301 North Federal Highway, Suite 140, Boca Raton, FL. IS PROHIBITED.

Sheet # TF5008